SG-M
INSTRUCTION MANUAL

System is compatible with all Datalogic SG safety light curtains with muting function feature.
For correct use and safety prescriptions refer to the user manual of Datalogic safety light curtains where muting kit is installed.

With modular muting systems it is possible to arrange multiple configurations.

L-MUTING

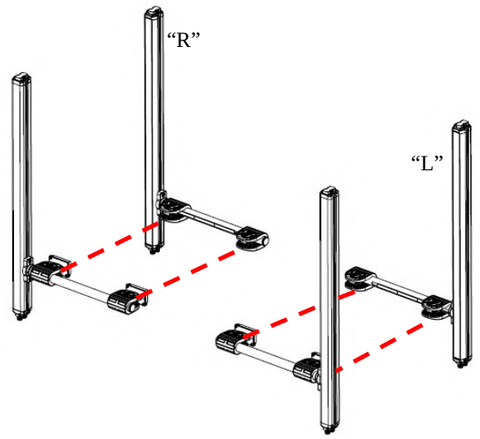

MODEL	DESCRIPTION	ORDER NUMBER
SG-ML-S8-L	Kit for L Muting, left side: 2 sensors S8-PR-3-B01-PP with a 0.7m cable with M12 connector; 2 reflectors; 1 active arm; 1 passive arm; 2 cable-lockers	95ASE2600
SG-ML-S8-R	Kit for L Muting, right side: 2 sensors S8-PR-3-B01-PP with a 0.7m cable with M12 connector; 2 reflectors; 1 active arm; 1 passive arm; 2 cable-lockers	95ASE2370
SG-ML-S8-200-L	Kit for L Muting, left side: 2 sensors S8-PR-3-B01-PP with a 2m cable with M12 connector; 2 reflectors; 1 active arm; 1 passive arm; 2 cable-lockers	95ASE2590
SG-ML-S8-200-R	Kit for L Muting, right side: 2 sensors S8-PR-3-B01-PP with a 2m cable with M12 connector; 2 reflectors; 1 active arm; 1 passive arm; 2 cable-lockers	95ASE2340
SG-ML-S100-L	Kit for L Muting, left side: 2 sensors S100-PR-5-B10-PK; 2 reflectors; 1 active arm; 1 passive arm; 2 cable-lockers; 2x 700mm cables with M12 connectors	95ASE2620
SG-ML-S100-R	Kit for L Muting, right side: 2 sensors S100-PR-5-B10-PK; 2 reflectors; 1 active arm; 1 passive arm; 2 cable-lockers; 2x 700mm cables with M12 connectors	95ASE2430
SG-ML-S100-200-L	Kit for L Muting, left side: 2 sensors S100-PR-5-B10-PK; 2 reflectors; 1 active arm; 1 passive arm; 2 cable-lockers; 2 x 2000mm cables with M12 connectors	95ASE2610
SG-ML-S100-200-R	Kit for L Muting, right side: 2 sensors S100-PR-5-B10-PK; 2 reflectors; 1 active arm; 1 passive arm; 2 cable-lockers; 2 x 2000mm cables with M12 connectors	95ASE2400

T-MUTING

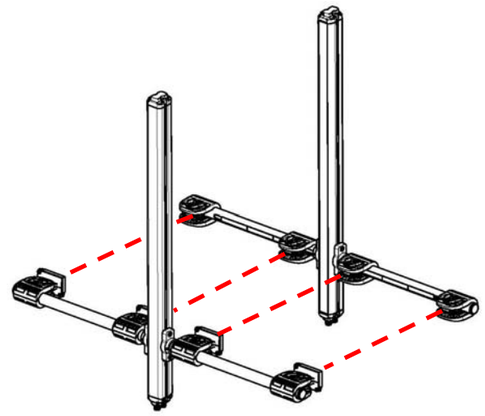

MODEL	DESCRIPTION	ORDER NUMBER
SG-MT-S8	Kit for T Muting: 4 sensors S8-PR-3-B01-PP with a 0.7m cable with M12 connector; 4 reflectors; 2 active arms; 2 passive arms; 4 cable-lockers	95ASE2380
SG-MT-S8-200	Kit for T Muting: 4 sensors S8-PR-3-B01-PP with a 2m cable with M12 connector; 4 reflectors; 2 active arms; 2 passive arms; 4 cable-lockers	95ASE2350
SG-MT-S100	Kit for T Muting: 4 sensors S100-PR-5-B10-PK; 4 reflectors; 2 active arms; 2 passive arms; 4 cable-lockers; 4 x 700mm cables with M12 connectors	95ASE2440
SG-MT-S100-200	Kit for T Muting: 4 sensors S100-PR-5-B10-PK; 4 reflectors; 2 active arms; 2 passive arms; 4 cable-lockers; 4 x 2000mm cables with M12 connectors	95ASE2410

X-MUTING

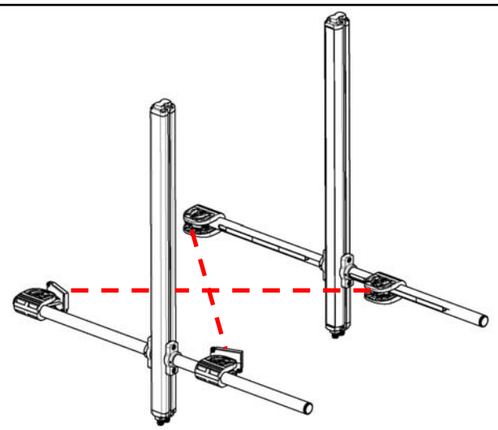

MODEL	DESCRIPTION	ORDER NUMBER
SG-MX-S8	Kit for X Muting; 2 sensors S8-PR-3-B01-PP with a 0.7m cable with M12 connector; 2 reflectors; 2 active arms; 2 passive arms; 4 cable-lockers	95ASE2390
SG-MX-S8-200	Kit for X Muting; 2 sensors S8-PR-3-B01-PP with 2m cable with M12 connector; 2 reflectors; 2 active arms; 2 passive arms; 4 cable-lockers	95ASE2360
SG-MX-S100	Kit for X Muting; 2 sensors S100-PR-5-B10-PK; 2 reflectors; 2 active arms; 2 passive arms; 4 cable-lockers; 700mm pigtail cables with M12 connectors	95ASE2450
SG-MX-S100-200	Kit for X Muting; 2 sensors S100-PR-5-B10-PK; 2 reflectors; 2 active arms; 2 passive arms; 4 cable-lockers; 2000mm pigtail cables with M12 connectors	95ASE2420

MOUNTING

- Put the arm slider (1) into the column slot (2).
  Fix the arm (3) in the desired position by screws (4), 1 Nm recommended tightening torque.

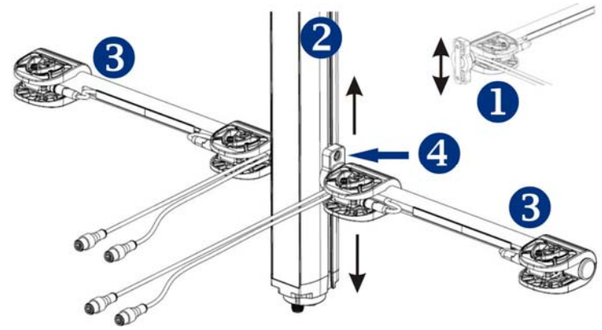

- Rotate sensors/reflectors support (5) in the desired position ; if necessary, translate support removing and spacing cable-locker (6) and fix by screws (7), 2 - 3 Nm recommended tightening torque.

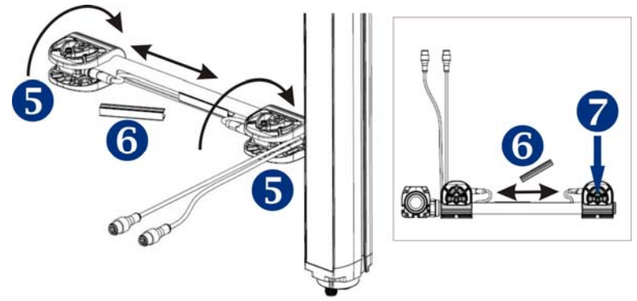

- Loosen the two screws (8) and rotate/set the sensor/reflector as desired, then fix by screws (8), 1 Nm recommended tightening torque.

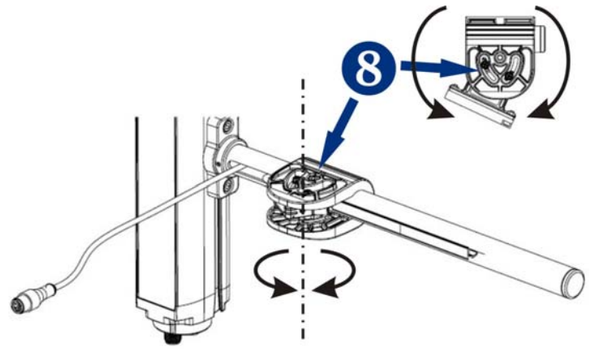

NOTE:
- For It is recommended to use the Datalogic SG-M-CB connection box for electrical connections of the SG-M kit to the Datalogic safety curtains.
- For each muting system kit it is recommended to use the same sensors type kit.
- Sensors must be set on Dark Mode.

Datalogic S.r.l.
Via S. Vitalino 13 - 40012 Calderara di Reno - Italy
Tel: +39 051 3147011 - Fax: +39 051 3147205 - www.datalogic.com

Helpful links at www.datalogic.com: **Contact Us, Terms and Conditions, Support.**

The warranty period for this product is 36 months. See General Terms and Conditions of Sales for further details.

Under current Italian and European laws, Datalogic is not obliged to take care of product disposal at the end of its life. Datalogic recommends disposing of the product in compliance with local laws or contacting authorised waste collection centres.

© 2015 - 2017 Datalogic S.p.A. and/or its affiliates ◆ ALL RIGHTS RESERVED. ◆ Without limiting the rights under copyright, no part of this documentation may be reproduced, stored in or introduced into a retrieval system, or transmitted in any form or by any means, or for any purpose, without the express written permission of Datalogic S.p.A. and/or its affiliates. Datalogic and the Datalogic logo are registered trademarks of Datalogic S.p.A. in many countries, including the U.S.A. and the E.U. All other trademarks and brands are property of their respective owners. Datalogic reserves the right to make modifications and improvements without prior notification.

821003472 Rev.B

SG-M-CB
CONNECTION BOX

ISTRUCTION MANUAL

GENERAL INFORMATION

The SG-M-CB Connection Box is part of SG-M accessories for muting, to be used with DATALOGIC safety light curtains of SG series, with integrated muting function (i.e. SG BODY REFLECTOR MUTING).
Muting sensors can be connected to SG-M-CB Connection box via M12 cables.
The signals are connected to Safety light curtain dedicated muting connector via approx. 0.5m long pigtail cable with M12 female connector.

Aside from the green LEDs* (to indicate sensors output status), the SG-M-CB does not contain any electronic elements and is therefore not subject to any safety classification.

Features:

- Supply and switching voltage +24V DC
- M12 connection
- Simple connection to safety light curtains.

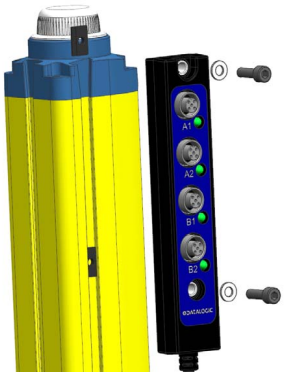

** For correct operation of LED indicators, it is mandatory to connect identical sensors to the four M12 sockets.*

DIMENSIONS

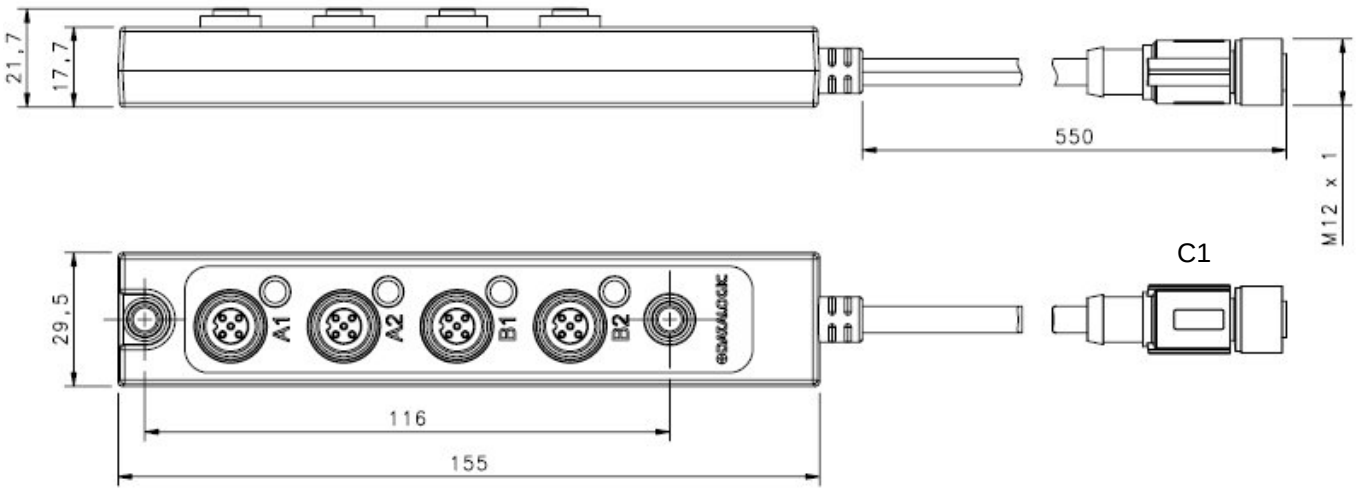

dimensions in mm

TECHNICAL DATA

Power supply & Switching voltage:	+24 VDC ±20%
Current load max.:	1 A
Insulating resistance:	$>10^{09}$ Ω
Mechanical protection:	IP 65
Operating temperature:	-10°C....+55°C
Storage Temperature:	-25°C....+70°C
Housing material:	PVC, Black (UL Recognized)
Housing Cable (C2):	PVC, Black (UL Recognized)
Housing Connector (C1):	Plug M12-5P A-Coding Female
Housing Connectors (A1;A2;B1;B2):	Sockets M12-5P A-Coding Female

Pin assignment:

PIN	C1	A1	A2	B1	B2
1	24V	24V	24V	24V	24V
2	MUT2	-	-	-	-
3	0 V	0 V	0 V	0 V	0 V
4	MUT 1	MUT 1	MUT 1	MUT 2	MUT 2
5	-	-	-	-	-

ORDER GUIDE

Model	Description	Order number
SG-M-CB	CONNECTION BOX	95ASE2500
SG-M-CB-KIT	MOUNT. KIT	95ASE2830

For each muting system kit is recommended to use same sensors type.

Datalogic S.r.l.
Via S. Vitalino 13 - 40012 Calderara di Reno - Italy
Tel: +39 051 3147011 - Fax: +39 051 3147205 - www.datalogic.com

Helpful links at www.datalogic.com: **Contact Us, Terms and Conditions, Support**.

The warranty period for this product is 36 months. See General Terms and Conditions of Sales for further details.

Under current Italian and European laws, Datalogic is not obliged to take care of product disposal at the end of its life. Datalogic recommends disposing of the product in compliance with local laws or contacting authorised waste collection centres.

© 2015 - 2017 Datalogic S.p.A. and/or its affiliates ◆ ALL RIGHTS RESERVED. ◆ Without limiting the rights under copyright, no part of this documentation may be reproduced, stored in or introduced into a retrieval system, or transmitted in any form or by any means, or for any purpose, without the express written permission of Datalogic S.p.A. and/or its affiliates. Datalogic and the Datalogic logo are registered trademarks of Datalogic S.p.A. in many countries, including the U.S.A. and the E.U. All other trademarks and brands are property of their respective owners. Datalogic reserves the right to make modifications and improvements without prior notification.

821003681 Rev. A