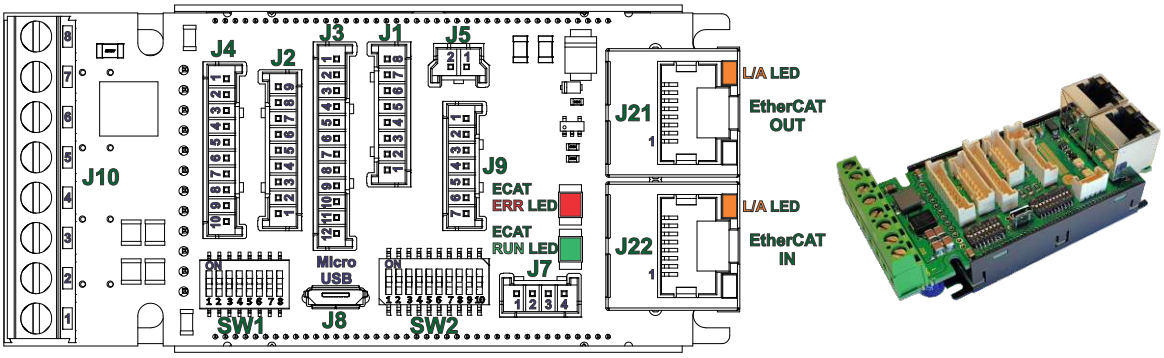

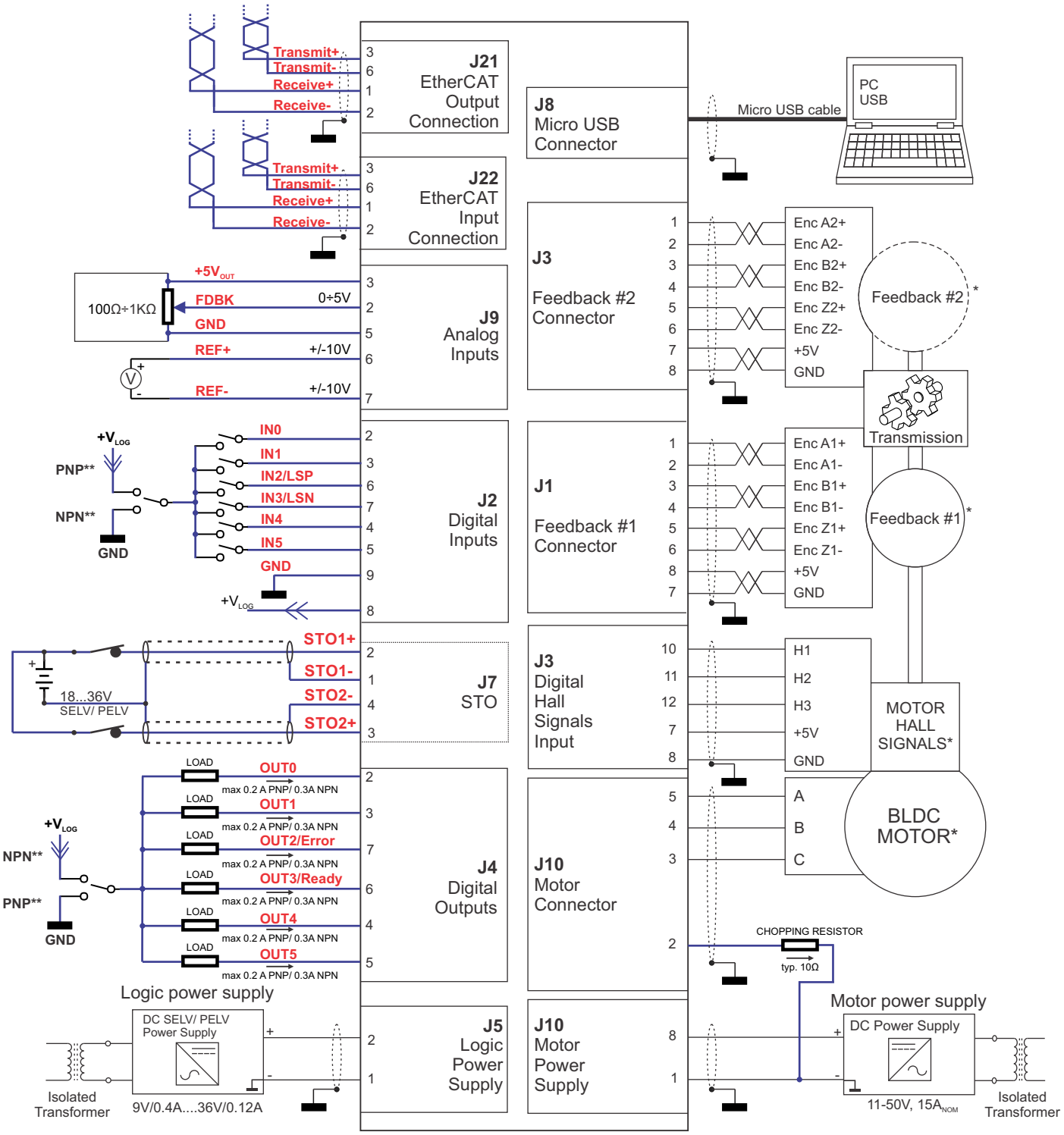

iPOS4810 XZ-CAT	P/N:P022.815.E122
iPOS4815 XZ-CAT	P/N:P022.816.E122

Copyright © Technosoft 2021. All rights reserved.

Title: iPOS481x XZ-CAT - Electrical Connection Diagram

Size	Document Number:	Author:	Rev
A4	P091.022.XZ.CAT.CDG.0421	EP	C

Date: 0421 Sheet 1 of 1

* For all available feedback/ motor options, check the user manual of the drive

** The PNP/NPN connection is configured by software