FRONT VIEW

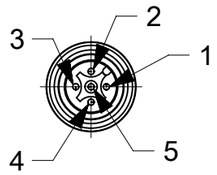

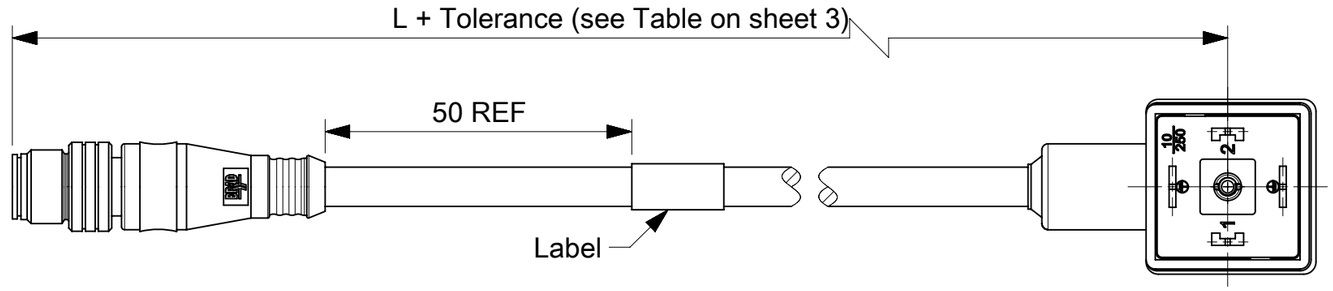

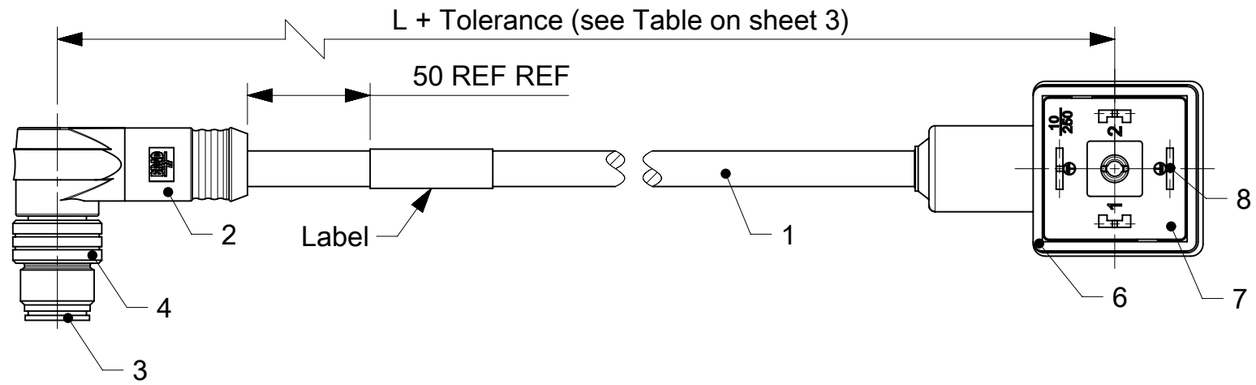

STANDARD
SCREW & GASKET
Index of protection: IP65

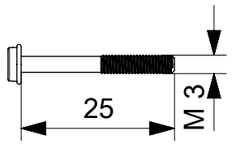

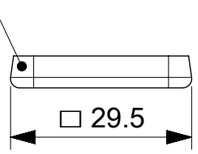

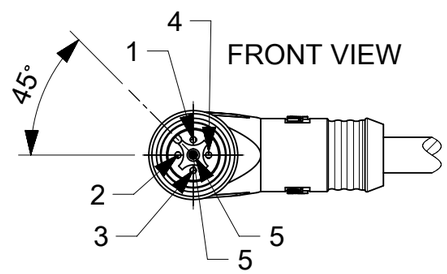

DIN Connector views
for PN without LED

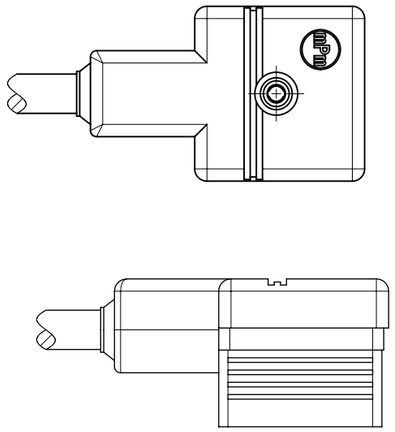

DIN Connector views
for PN with LED

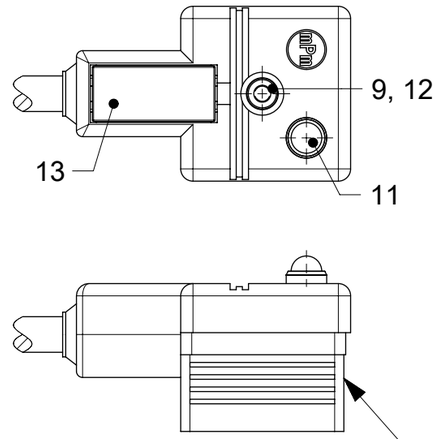

Electrical diagram printed in white

ELECTRICAL DIAGRAMS

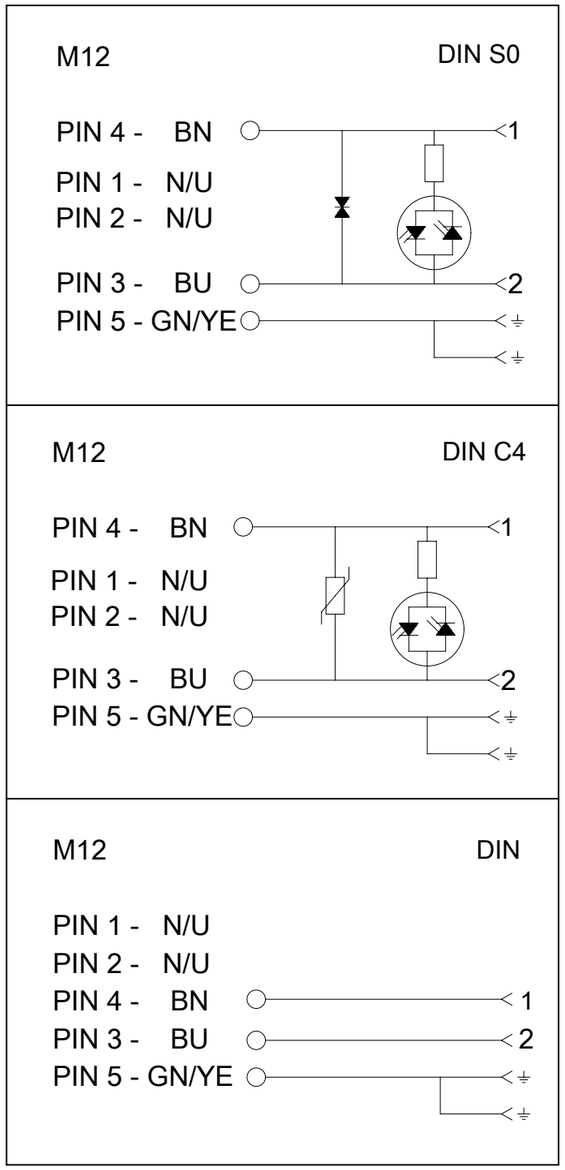

BILL OF MATERIALS

ITEM	QTY.	DESCRIPTION
14	0/2	I/D CARRIER
13	0/1	LABEL PLASTIC
12	0/1	WASHER
11	0/1	PCB
10	1	GASKET
9	1	SCREW
8	4	CONTACT DIN
7	1	INSERT DIN A
6	-	MOULDING MATERIAL BLACK PP
5	5	CONTACT MALE
4	1	M12 COUPLING NUT MALE
3	1	M12 INSERT 5P MALE
2	-	MOULDING MATERIAL BLACK TPU
1	-	CABLE

DOCUMENT STATUS	P1	RELEASE DATE	2024/04/05 09:07:10

THIS DRAWING CONTAINS INFORMATION THAT IS PROPRIETARY TO MOLEX ELECTRONIC TECHNOLOGIES, LLC AND SHOULD NOT BE USED WITHOUT WRITTEN PERMISSION

FUNCTIONAL SYMBOLS: F_A = 0, F_C = 0, F_P = 0
DIVISIONAL SYMBOLS

DIMENSION UNITS: mm
SCALE: 1:1
GENERAL TOLERANCES (UNLESS SPECIFIED)

ANGULAR TOL	±	1.0 °
4 PLACES	±	
3 PLACES	±	
2 PLACES	±	0.05
1 PLACE	±	0.3
0 PLACES	±	0.5

DRAFT WHERE APPLICABLE MUST REMAIN WITHIN DIMENSIONS

CURRENT REV DESC: RETRACTED DOCUMENT

EC NO: 782067
DRWN: VISHAH2 2024/03/26
CHK'D: RSILLER 2024/04/05
APPR: RSILLER 2024/04/05

INITIAL REVISION:
DRWN: APAWLAK01 2016/05/30
APPR: RSILLER 2024/04/05

THIRD ANGLE PROJECTION
DRAWING: A3-SIZE
SERIES: 121035

molex

E850 DIN A / MMC 5P MM

PRODUCT CUSTOMER DRAWING

DOCUMENT NUMBER	DOC TYPE	DOC PART	REVISION
1210350367	PSD	000	B

MATERIAL NUMBER	CUSTOMER	SHEET NUMBER
SEE SHEET 3	GENERAL MARKET	1 OF 3

FORMAT: master-tb-prod-A3
REVISION: J1
DATE: 2021/05/01

ENGINEERING NO. - NUMERICAL CODE (Available parts see PART LIST table. Others parts available upon request).

E	8	5	0	X	X	X	X	X	X	X	X	X	X
													OPTIONS

- E: E=Form A (18mm contact spacing)
- 8: 8=MMC M12 Connector
- 5: 5=5 Poles
- 0: 0=Default Standard Wiring
- X (Electrical configuration):
  0 = Without circuit
  A = S0 24V Yellow LED
  B = C4 24V Yellow LED
  C = S0 110V Yellow LED
  D = C4 110V Yellow LED
  E = S0 24V Green LED
  F = C4 24V Green LED
  G = S0 110V Green LED
  H = C4 110V Green LED
  J = S0 24V Red LED
  K = C4 24V Red LED
  L = S0 110V Red LED
  M = C4 110V Red LED
  S = C4 230V Yellow LED
- X (DIN Earth Position - o'clock & M12 connector body):
  0 = Earth H6/H12, Male Straight
  2 = Earth H6/H12, Male Right Angle
- X (Cable type: See Table)
- X (Units: M=Meter)
- X (Length Examples:
  005=0.5 units
  010=1 units
  100=10 units)
- X (OPTIONS):
  Overmold color:
  Blank (Standard)=Black
  A=Grey / G=Black / Y=Yellow

  Coupling Nut:
  Blank (Standard)=Knurled Brass Ni Plated
  1=Hexagonal Stainless steel
  5=Knurled Derlin
  7=Knurled Brass Ni Plated, Teflon Coated
  9=Knurled / Hexagonal Brass Ni Plated

  H= 2 pcs. of I/D Carrier PVC Transparent (Cables Ixx & P82 always with 2 pcs. I/D Carrier)

  R= NBR Integrated Gasket & Screw (IP67)

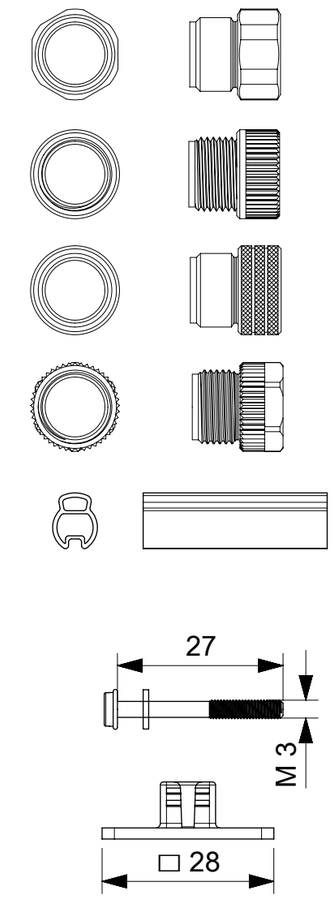

CABLE TYPE	NO. OF WIRES	CROSS SECTION	CABLE JACKET	UL	CSA	STATIC: TEMP. / BENDING RADIUS	DYNAMIC: TEMP. / BENDING RADIUS	SHIELD
A23	3	0.75mm²	PVC BLACK	-	-	-20°C to +70°C, 3xO.D.	-15°C to +70°C, 5xO.D.	-
A58	3	20AWG	PVC BLACK	UL 2661	C22.2 II A 105°C/300V	-30°C to +105°C, 10xO.D.	-5°C to +105°C, 15xO.D.	-
B08	3	18AWG	PUR YELLOW	UL 20668	C22.2 II A 90°C/300V	-	-	-
B31	3	0.50mm²	WSOR BLACK	UL 21215	-	-	-25°C to +80°C, 7.5xO.D.	-
E12	3	0.50mm²	PVC BLACK	-	-	-20°C to +70°C, 3xO.D.	-15°C to +70°C, 5xO.D.	-
I12	3	0.50mm²	CEI PVC GREY	-	-	-25°C to +70°C, 10xO.D.	-5°C to +70°C, 15xO.D.	-
P12	3	0.50mm²	PUR BLACK	-	-	-40°C to +90°C, 7.5xO.D.	-15°C to +90°C, 12.5xO.D.	
P82	3	0.34mm²	PUR IRR ORANGE	-	-	-50°C to +105°C, 5xO.D.	-40°C to +105°C, 7.5xO.D.	-

Table of length tolerances [mm]		
Over	Up to and including	Tolerance
0	1000	±20
1000	3000	±30
3000	5000	±40
5000	10000	±50
10000	15000	±100
15000	20000	±150
20000		±L/100

THIS DRAWING CONTAINS INFORMATION THAT IS PROPRIETARY TO MOLEX ELECTRONIC TECHNOLOGIES, LLC AND SHOULD NOT BE USED WITHOUT WRITTEN PERMISSION

FUNCTIONAL SYMBOLS: FA = 0, FC = 0, FP = 0
DIVISIONAL SYMBOLS

DIMENSION UNITS: mm
SCALE: 1:1

GENERAL TOLERANCES (UNLESS SPECIFIED)

ANGULAR TOL	±	1.0 °
4 PLACES	±	
3 PLACES	±	
2 PLACES	±	0.05
1 PLACE	±	0.3
0 PLACES	±	0.5

DRAFT WHERE APPLICABLE MUST REMAIN WITHIN DIMENSIONS

CURRENT REV DESC: RETRACTED DOCUMENT

EC NO: 782067
DRWN: VISHAH2 2024/03/26
CHK'D: RSILLER 2024/04/05
APPR: RSILLER 2024/04/05

INITIAL REVISION:
DRWN: APAWLAK01 2016/05/30
APPR: RSILLER 2024/04/05

THIRD ANGLE PROJECTION | DRAWING: A3-SIZE | SERIES: 121035

molex

E850 DIN A / MMC 5P MM

PRODUCT CUSTOMER DRAWING

DOCUMENT NUMBER	DOC TYPE	DOC PART	REVISION
1210350367	PSD	000	B

MATERIAL NUMBER	CUSTOMER	SHEET NUMBER
SEE SHEET 3	GENERAL MARKET	2 OF 3

DOCUMENT STATUS	P1	RELEASE DATE	2024/04/05 09:07:10

FORMAT: master-tb-prod-A3
REVISION: J1
DATE: 2021/05/01

PART LIST

Pos.	Part No.	Engineering No.	Cable Length
1	1210350133	E85000P12M006	0.6m
2	1210350148	E85000P12M020	2m
3	1210350156	E85000P12M010	1m
4	1210350157	E85000P12M030	3m
5	1210350201	E85000E12M010	1m
6	1210350202	E85002P12M015	1.5m
7	1210350207	E85000E12M003	0.3m
8	1210350208	E85000E12M006	0.6m
9	1210350209	E85000P12M003	0.3m
10	1210350210	E85000P82M030	3m
11	1210350242	E85002E12M006	0.6m
12	1210350290	E85000E12M030	3m
13	1210350291	E85000E12M050	5m
14	1210350292	E85000P12M100	10m
15	1210350309	E85002A23M020	2m
16	1210350310	E85002A23M030	3m
17	1210350311	E85002A23M040	4m
18	1210350313	E85000P12M017	1.7m
19	1210350326	E85000P12M050	5m
20	1210350339	E85002P12M020	2m
21	1210350348	E85000P12M015	1.5m
22	1210350349	E85000P12M009	0.9m
23	1210350367	E85000P12M020R	2m
24	1210350368	E85000P12M010R	1m
25	1210360178	E850A0P12M020	2m
26	1210360184	E850B0I12M010	1m
27	1210360186	E850B0I12M020	2m
28	1210360187	E850B0I12M030	3m
29	1210360192	E850B0P12M006	0.6m
30	1210360193	E850B0P12M010	1m
31	1210360194	E850B0P12M015	1.5m
32	1210360195	E850B0P12M020	2m
33	1210360196	E850B0P12M050	5m
34	1210360203	E850B2I12M010	1m
35	1210360206	E850B2I12M050	5m
36	1210360208	E850B2P12M006	0.6m
37	1210360209	E850B2P12M010	1m
38	1210360210	E850B2P12M020	2m
39	1210360211	E850B2P12M030	3m
40	1210360212	E850B2P12M050	5m
41	1210360356	E850B0P12M030	3m
42	1210360399	E850B0P12M003	0.3m
43	1210360453	E850B0P12M012	1.2m
44	1210360454	E850B0P12M013	1.3m
45	1210360455	E850B0P12M014	1.4m
46	1210360456	E850B0P12M017	1.7m
47	1210360457	E850B2P12M005	0.5m
48	1210360458	E850D0P12M010	1m
49	1210360491	E850A0A58M010	1m
50	1210360492	E850A0A58M015	1.5m
51	1210360493	E850A0A58M030	3m
52	1210360494	E850A0A58M050	5m
53	1210360495	E850A0A58M100	10m
54	1210360496	E850B2B08M030	3m
55	1210360497	E850B2P12M025G	2.5m
56	1210360498	E850T2I12M010	1m
57	1210360542	E850B0E12M0155	1.5m
58	1210360557	E850B0E12M006	0.6m
59	1210360558	E850B0E12M030	3m
60	1210360559	E850B0E12M050	5m
61	1210360560	E850B0P12M0201	2m
62	1210360574	E850B0E12M020	2m
63	1210360576	E850B2E12M010	1m
64	1210360585	E850A0A58M020	2m
65	1210360586	E850B0A58M020	2m
66	1210360588	E850B0B08M003	0.3m
67	1210360589	E850B0B08M010	1m
68	1210360590	E850B0B08M020	2m
69	1210360593	E850B0P12M040	4m
70	1210360594	E850B0P12M100	10m
71	1210360596	E850B2E12M006	0.6m
72	1210360597	E850T2P12M010	1m
73	1210360601	E850K0E12M010	1m
74	1210360627	E850B0E12M010	1m
75	1210360629	E850B2P12M0105	1m
76	1210360650	E850B0P12M006H	0.6m
77	1210360651	E850B2P12M020H	2m
78	1210360658	E850B0A58M006	0.6m
79	1210360659	E850B0A58M015	1.5m
80	1210360667	E850A0A58M070	7m
81	1210360675	E850C0A58M100	10m
82	1210360678	E850B2E12M003	0.3m
83	1210360686	E850A2A58M010	1m
84	1210360694	E850A0A58M006	0.6m
85	1210360696	E85002E12M003	0.3m
86	1210360708	E850B0A23M030	3m
87	1210360709	E850B0A23M050	5m
88	1210360719	E850B2A23M017	1.7m
89	1210360725	E850D0A23M030	3m
90	1210360743	E850B2I12M006	0.6m
91	1210360745	E850B0I12M006	0.6m
92	1210360754	E850A0A58M005	0.5m
93	1210360756	E85002E12M030	3m
94	1210360771	E850A0P12M030	3m
95	1210360772	E850A0P12M040	4m
96	1210360773	E850A0P12M100	10m
97	1210360774	E850A2P12M010	1m
98	1210360775	E850A2P12M015	1.5m
99	1210360776	E850A2P12M020	2m
100	1210360788	E850D0P12M006	0.6m
101	1210360789	E850D0P12M020	2m
102	1210360795	E850A0P12M006	0.6m
103	1210360796	E850C0P12M006	0.6m
104	1210360797	E850A0P12M010	1m
105	1210360798	E850C0P12M010	1m
106	1210360799	E850C0P12M020	2m
107	1210360813	E850A0A58M007	0.7m
108	1210360815	E850B0I12M010Y	1m
109	1210360816	E850B0I12M020Y	2m
110	1210360817	E850B0I12M030Y	3m
111	1210360819	E850B0I12M006Y	0.6m
112	1210360821	E850B2P12M015	1.5m
113	1210360844	E850B0P12M021	2.1m
114	1210360845	E850B0P12M024	2.4m
115	1210360846	E850B0P12M027	2.7m
116	1210360847	E850B0P12M058	5.8m
117	1210360848	E850B0P12M080	8m
118	1210360849	E850B0P12M085	8.5m
119	1210360850	E850B0P12M090	9m
120	1210360853	E850B2P12M003	0.3m
121	1210360857	E850B0P12M010H	1m
122	1210360858	E850B0P12M020H	2m
123	1210360893	E850B0B31M006	0.6m
124	1210360894	E850B0B31M010	1m
125	1210360895	E850B0B31M015	1.5m
126	1210360896	E850B0B31M030	3m
127	1210360897	E850B2B31M006	0.6m
128	1210360898	E850B2B31M010	1m
129	1210360899	E850B2B31M015	1.5m
130	1210360900	E850B2B31M030	3m
131	1210360940	E850B0P12M008	0.8m
132	1210360957	E850B0P12M030H	3m
133	1210360959	E850B0P12M010Y	1m
134	1210360970	E850B0P12M010R	1m
135	1210360971	E850B0P12M020R	2m
136	1210361900	E850B0A23M015	1.5m
137			
138			
139			
140			

THIS DRAWING CONTAINS INFORMATION THAT IS PROPRIETARY TO MOLEX ELECTRONIC TECHNOLOGIES, LLC AND SHOULD NOT BE USED WITHOUT WRITTEN PERMISSION

FUNCTIONAL SYMBOLS: F/A = 0, F/C = 0, F/D = 0

DIVISIONAL SYMBOLS

DIMENSION UNITS: mm
SCALE: 1:1

GENERAL TOLERANCES (UNLESS SPECIFIED)

ANGULAR TOL	±	1.0 °
4 PLACES	±	
3 PLACES	±	
2 PLACES	±	0.05
1 PLACE	±	0.3
0 PLACES	±	0.5

DRAFT WHERE APPLICABLE MUST REMAIN WITHIN DIMENSIONS

CURRENT REV DESC: RETRACTED DOCUMENT

EC NO: 782067
DRWN: VISHAH2 2024/03/26
CHK'D: RSILLER 2024/04/05
APPR: RSILLER 2024/04/05

INITIAL REVISION:
DRWN: APAWLAK01 2016/05/30
APPR: RSILLER 2024/04/05

THIRD ANGLE PROJECTION

DRAWING: A3-SIZE
SERIES: 121035

molex

E850 DIN A / MMC 5P MM

PRODUCT CUSTOMER DRAWING

DOCUMENT NUMBER	DOC TYPE	DOC PART	REVISION
1210350367	PSD	000	B

MATERIAL NUMBER	CUSTOMER	SHEET NUMBER
SEE PART LIST	GENERAL MARKET	3 OF 3

DOCUMENT STATUS	P1	RELEASE DATE	2024/04/05 09:07:10

FORMAT: master-tb-prod-A3
REVISION: J1
DATE: 2021/05/01

Table of lenght tolerances [mm]		
Over	Up to and including	Tolerance
0	1000	±20
1000	3000	±30
3000	5000	±40
5000	10000	±50
10000	15000	±100
15000	20000	±150
20000		±L/100

Face view

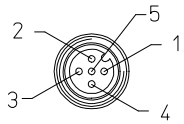

Male M12 Straight

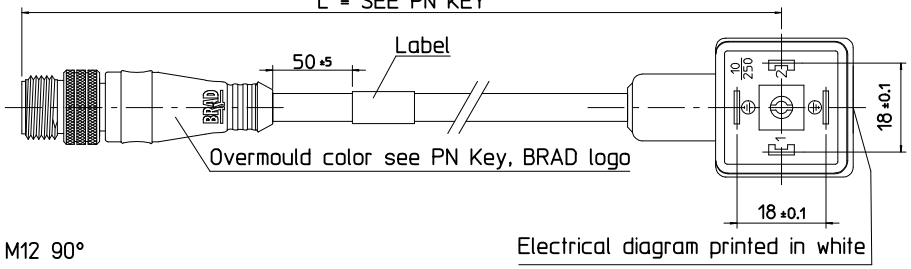

Screw & Gasket

Index of protection: IP 65

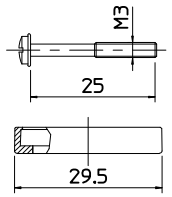

Male M12 90°

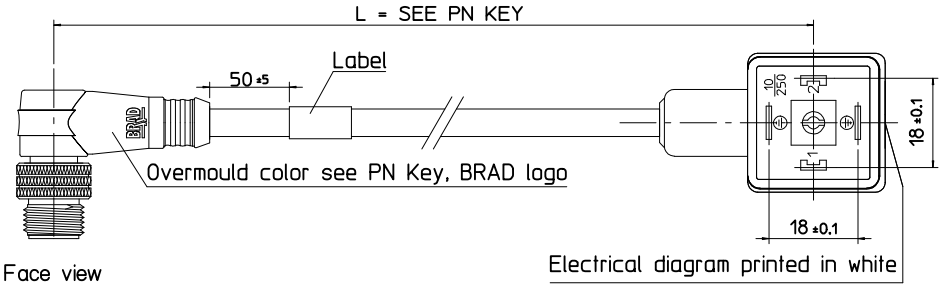

Face view

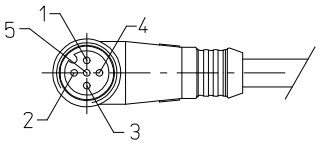

Connector view for cables without led

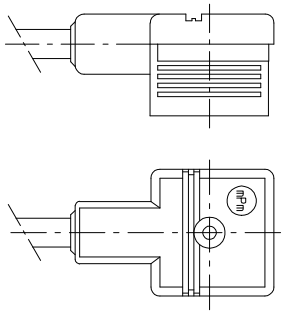

Connector view for cables with led

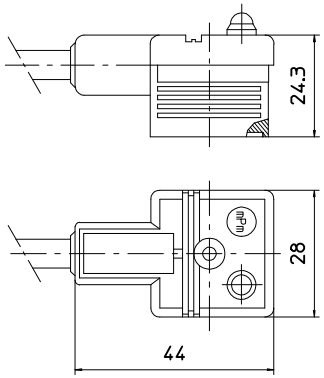

PART No MATRIX - PN Key

E	8	5	X	X	X	X	X	X	X	X	X	X	X	X	X

OPTIONS

E = Form A (18mm contact spacing)

8 = MMC Single Keyway

5=5 Pole

Wiring details:
0 = Positive Switching (pin 3&4)
1 = Negative Switching (pin 1&4)

Electrical configuration:
0 = Without LED/Without circuit
A = S0 24V Yellow LED
B = C4 24V Yellow LED
C = S0 110V Yellow LED
D = C4 110V Yellow LED
E = S0 24V Green LED
F = C4 24V Green LED
G = S0 110V Green LED
H = C4 110V Green LED
J = S0 24V Red LED
K = C4 24V Red LED
L = S0 110V Red LED
M = C4 110V Red LED
S = C4 230V Yellow LED

XXX = Cable Type

DIN Earth Position - o'clock & M12 connector body:
0 = Earth H6/H12, MALE Straight
2 = Earth H6/H12, MALE 90°

M = Metres
F = Feet

Length:
020=2 Meters
050=5 Meters
200=20 Meters

Coupling Nut Material:
Blank=Standard
1=Stainless Steel
5=Delrin
7=Teflon coat

H=I/D Carrier
M12 Overmoulding color:
Blank=Black Standard
Y=Yellow
A=Grey

ADD CABLE B31	DESCRIPTION	REV
EC NO: IPG2014-0850		
DRWN: JMARSZALEK 2013/06/20		
CH'KD: MSZWAJKOWSKI 2013/11/07		
APPR: MIWASIECZKO 2013/11/08		

QUALITY SYMBOLS
▼=0
(C)=0

GENERAL TOLERANCES (UNLESS SPECIFIED)	mm	INCH
4 PLACES	± ---	± ---
3 PLACES	± ---	± ---
2 PLACES	± ---	± ---
1 PLACE	± ---	± ---
0 PLACE	± ---	± ---
ANGULAR ±---°		

DRAFT WHERE APPLICABLE MUST REMAIN WITHIN DIMENSIONS

DIMENSION STYLE: MM ONLY	SCALE	DESIGN UNITS: METRIC	FIRST ANGLE PROJECTION
DRAWN BY: JMARSZALEK	DATE: 2012/11/08	TITLE: E85XXXXXXXXXX DIN A + CORDSETS M12	
CHECKED BY: MSZWAJKOWSKI	DATE: 2012/11/08		
APPROVED BY: MIWASIECZKO	DATE: 2012/11/09	molex	
MATERIAL NO.: SEE SHEET 3		DOCUMENT NO.: SD-121036-001	SHEET NO.: 1 OF 3
SIZE: A3			

THIS DRAWING CONTAINS INFORMATION THAT IS PROPRIETARY TO MOLEX INCORPORATED AND SHOULD NOT BE USED WITHOUT WRITTEN PERMISSION

Electrical diagrams

Electrical diagram with circuit S0 (zener diode) for:

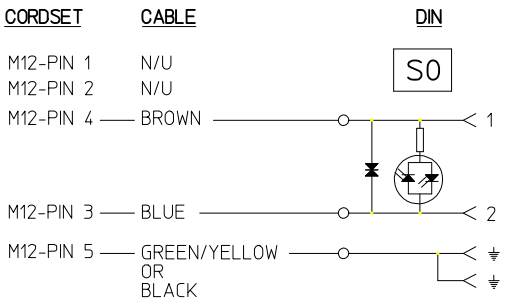

Electrical diagram with circuit C4 (VDR) for:

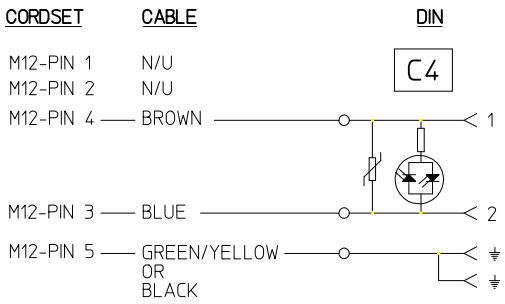

Cable type

Cable Type	Jacket Material	Jacket Color	Wire cross section	Braid
A23	PVC	Black	0.75mm²	no
A58	PVC	Black	20AWG	no
B08	PUR	Yellow	18AWG	no
E03	PVC	Black	0.34mm²	no
E12	PVC	Black	0.5mm²	no
I12	CEI PVC	Grey	0.5mm²	no
P12	PUR	Black	0.5mm²	no
P82	PUR IRR	Orange	0.34mm²	no
S26	PVC	Yellow	0.34mm²	yes
B31	PUR	Black	0.5mm²	no

ADD CABLE B31
EC NO: IPG2014-0850
DRWN:JMARSZALEK 2013/06/20
CH'KD:MSZWAJKOWSKI 2013/11/07
APPR:MIWASIECZKO 2013/11/08
DESCRIPTION
REV

QUALITY SYMBOLS
▼=0
(C)=0

GENERAL TOLERANCES (UNLESS SPECIFIED)

	mm	INCH
4 PLACES	± ---	± ---
3 PLACES	± ---	± ---
2 PLACES	± ---	± ---
1 PLACE	± ---	± ---
0 PLACE	± ---	± ---

ANGULAR ±---°

DRAFT WHERE APPLICABLE MUST REMAIN WITHIN DIMENSIONS

DIMENSION STYLE: MM ONLY
SCALE: 1:1
DESIGN UNITS: METRIC
FIRST ANGLE PROJECTION

DRAWN BY: JMARSZALEK DATE: 2012/11/08
CHECKED BY: MSZWAJKOWSKI DATE: 2012/11/08
APPROVED BY: MIWASIECZKO DATE: 2012/11/09

TITLE: E85XXXXXXXXXX
DIN A + CORDSETS M12

molex

MATERIAL NO.: SEE SHEET 3
DOCUMENT NO.: SD-121036-001
SHEET NO.: 2 OF 3
SIZE: A3

THIS DRAWING CONTAINS INFORMATION THAT IS PROPRIETARY TO MOLEX INCORPORATED AND SHOULD NOT BE USED WITHOUT WRITTEN PERMISSION

PART LIST

Pos.	Molex PN:	Engineering No.:
1	1210350133	E85000P12M006
2	1210350148	E85000P12M020
3	1210350156	E85000P12M010
4	1210350157	E85000P12M030
5	1210350201	E85000E12M010
6	1210350202	E85002P12M015
7	1210350207	E85000E12M003
8	1210350208	E85000E12M006
9	1210350209	E85000P12M003
10	1210350210	E85000P82M030
11	1210350242	E85002E12M006
12	1210350290	E85000E12M030
13	1210350291	E85000E12M050
14	1210350292	E85000P12M100
15	1210350309	E85002A23M020
16	1210350310	E85002A23M030
17	1210350311	E85002A23M040
18	1210350313	E85000P12M017
19	1210350326	E85000P12M050
20	1210350339	E85002P12M020
21	1210350348	E85000P12M015
22	1210350349	E85000P12M009
23	1210360178	E850A0P12M020
24	1210360184	E850B0I12M010
25	1210360186	E850B0I12M020
26	1210360187	E850B0I12M030
27	1210360192	E850B0P12M006
28	1210360193	E850B0P12M010
29	1210360194	E850B0P12M015
30	1210360195	E850B0P12M020
31	1210360196	E850B0P12M050
32	1210360198	E850B0S26M015
33	1210360199	E850B0S26M020
34	1210360203	E850B2I12M010
35	1210360206	E850B2I12M050
36	1210360208	E850B2P12M006
37	1210360209	E850B2P12M010
38	1210360210	E850B2P12M020
39	1210360211	E850B2P12M030
40	1210360212	E850B2P12M050

Pos.	Molex PN:	Engineering No.:
41	1210360356	E850B0P12M030
42	1210360399	E850B0P12M003
43	1210360453	E850B0P12M012
44	1210360454	E850B0P12M013
45	1210360455	E850B0P12M014
46	1210360456	E850B0P12M017
47	1210360457	E850B2P12M005
48	1210360458	E850D0P12M010
49	1210360491	E850A0A58M010
50	1210360492	E850A0A58M015
51	1210360493	E850A0A58M030
52	1210360494	E850A0A58M050
53	1210360495	E850A0A58M100
54	1210360496	E850B2B08M030
55	1210360497	E850B2P12M025G
56	1210360542	E850B0E12M0155
57	1210360557	E850B0E12M006
58	1210360558	E850B0E12M030
59	1210360559	E850B0E12M050
60	1210360560	E850B0P12M0201
61	1210360574	E850B0E12M020
62	1210360576	E850B2E12M010
63	1210360585	E850A0A58M020
64	1210360586	E850B0A58M020
65	1210360588	E850B0B08M003
66	1210360589	E850B0B08M010
67	1210360590	E850B0B08M020
68	1210360593	E850B0P12M040
69	1210360594	E850B0P12M100
70	1210360595	E850B0S26M010H
71	1210360596	E850B2E12M006
72	1210360601	E850K0E12M010
73	1210360627	E850B0E12M010
74	1210360628	E850B0S26M015H
75	1210360629	E850B2P12M0105
76	1210360651	E850B2P12M020H
77	1210360658	E850B0A58M006
78	1210360659	E850B0A58M015
79	1210360667	E850A0A58M070
80	1210360675	E850C0A58M100

Pos.	Molex PN:	Engineering No.:
81	1210360678	E850B2E12M003
82	1210360686	E850A2A58M010
83	1210360694	E850A0A58M006
84	1210360696	E85002E12M003
85	1210360708	E850B0A23M030
86	1210360719	E850B2A23M017
87	1210360725	E850D0A23M030
88	1210360743	E850B2I12M006
89	1210360745	E850B0I12M006
90	1210360754	E850A0A58M005
91	1210360756	E85002E12M030
92	1210360771	E850A0P12M030
93	1210360772	E850A0P12M040
94	1210360773	E850A0P12M100
95	1210360774	E850A2P12M010
96	1210360775	E850A2P12M015
97	1210360776	E850A2P12M020
98	1210360788	E850D0P12M006
99	1210360789	E850D0P12M020
100	1210360795	E850A0P12M006
101	1210360796	E850C0P12M006
102	1210360797	E850A0P12M010
103	1210360798	E850C0P12M010
104	1210360799	E850C0P12M020
105	1210360813	E850A0A58M007
106	1210360815	E850B0I12M010Y
107	1210360816	E850B0I12M020Y
108	1210360817	E850B0I12M030Y
109	1210360819	E850B0I12M006Y
110	1210360821	E850B2P12M015
111	1210360844	E850B0P12M021
112	1210360845	E850B0P12M024
113	1210360846	E850B0P12M027
114	1210360847	E850B0P12M058
115	1210360848	E850B0P12M080
116	1210360849	E850B0P12M085
117	1210360850	E850B0P12M090
118	1210360853	E850B2P12M003
119	1210360857	E850B0P12M010H
120	1210360858	E850B0P12M020H

Pos.	Molex PN:	Engineering No.:
121	1210360893	E850B0B31M006
122	1210360894	E850B0B31M010
123	1210360895	E850B0B31M015
124	1210360896	E850B0B31M030
125	1210360897	E850B2B31M006
126	1210360898	E850B2B31M010
127	1210360899	E850B2B31M015
128	1210360900	E850B2B31M030
129	1210361900	E850B0A23M015
130		
131		
132		
133		
134		
135		
136		
137		
138		
139		
140		
141		
142		
143		
144		
145		
146		
147		
148		
149		
150		
151		
152		
153		
154		
155		
156		
157		
158		
159		
160		

Pos.	Molex PN:	Engineering No.:
161		
162		
163		
164		
165		
166		
167		
168		
169		
170		
171		
172		
173		
174		
175		
176		
177		
178		
179		
180		
181		
182		
183		
184		
185		
186		
187		
188		
189		
190		
191		
192		
193		
194		
195		
196		
197		
198		
199		
200		

ADD NEW PN
EC NO: IPG2014-0850
DRWN:JMARSZALEK 2013/06/20
CH'KD:MSZWAJKOWSKI 2013/11/07
APPR:MIWASIECZKO 2013/11/08
REV DESCRIPTION

QUALITY SYMBOLS
▼=0
(C)=0

GENERAL TOLERANCES (UNLESS SPECIFIED)

	mm	INCH
4 PLACES	± ---	± ---
3 PLACES	± ---	± ---
2 PLACES	± ---	± ---
1 PLACE	± ---	± ---
0 PLACE	± ---	± ---

ANGULAR ±---°

DRAFT WHERE APPLICABLE MUST REMAIN WITHIN DIMENSIONS

DIMENSION STYLE: MM ONLY
SCALE: 1:1
DESIGN UNITS: METRIC
FIRST ANGLE PROJECTION

DRAWN BY: JMARSZALEK DATE: 2012/11/08
CHECKED BY: MSZWAJKOWSKI DATE: 2012/11/08
APPROVED BY: MIWASIECZKO DATE: 2012/11/09

TITLE: E85XXXXXXXXXX DIN A + CORDSETS M12

molex

MATERIAL NO.: SEE SHEET 3
DOCUMENT NO.: SD-121036-001
SHEET NO.: 3 OF 3
SIZE: A3

THIS DRAWING CONTAINS INFORMATION THAT IS PROPRIETARY TO MOLEX INCORPORATED AND SHOULD NOT BE USED WITHOUT WRITTEN PERMISSION