df Electric

RAPIDPLUS

HIGH SPEED FUSE LINKS FOR SEMICONDUCTORS

Rapidplus®

aR
SQB
square body
semiconductor protection fuse links

SQB | SQB3 | BLADE CONTACT 80mm

FLUSH END CONTACT | BLADE CONTACT 80mm | BLADE CONTACT 110mm

PROTECTING THE WORLD

dfelectric.es

aR
SQB
square body
semiconductor protection fuse links

SQB3 | BLADE CONTACT 80mm

RAPIDPLUS

Rapidplus®

SQB3 | BLADE CONTACT 80mm

RATED VOLTAGE
690V AC

RATED CURRENT
500A...1400A

BREAKING CAPACITY
120kA

STANDARDS
IEC/EN 60269-1
IEC/EN 60269-4
UL248-1
UL248-13

Rapidplus® SQB
Square body fuse links for semiconductors

RAPIDPLUS SQUARE BODY (SQB) aR fuse links are specially designed for protection of power semiconductor devices.

Typical application comprise protection of diodes, thyristors, triacs and IGBTs, used in power rectifiers, UPS, converters, motor drives, soft starters, solid state relays, photovoltaic inverters, welding inverters and any application in power electronics, where it is necessary to protect power semiconductor devices.

Thanks to the design of their melting elements, the materials employed and their construction with solidified sand, these fuses provide excellent characteristics:

- Ultra-fast acting.
- Very good current limiting.
- Very low I^2t values.
- High breaking capacity.
- Excellent cycling capability

The range comprises the following fuse links:

→ **Size SQB3 690V AC 500A to 1400A (BLADE CONTACT 80mm)**

These fuse links have a trip indicator that can be used as a visual indication or can be equipped with a microswitch mounted directly on the fuse link.

RoHS COMPLIANT

Dimensions

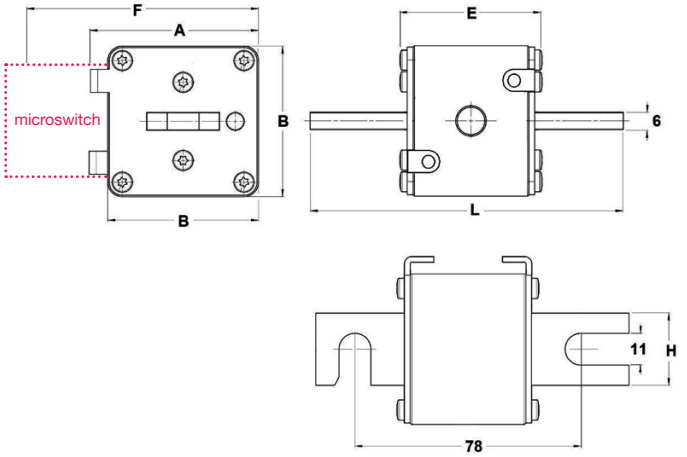

A	B	E	F	H	L
81	73,5	50,5	109	30	108,5

Weight 854gr

Range

In (A)	REFERENCE	PACKING Uni /BOX
500	**251525**	1
550	**251530**	1
630	**251535**	1
700	**251540**	1
800	**251545**	1
900	**251550**	1
1000	**251555**	1
1100	**251560**	1
1250	**251565**	1
1400	**251570**	1

aR
SQB
square body
semiconductor protection fuse links

SQB3 | BLADE CONTACT 80mm

RAPIDPLUS

Rapidplus®

Technical data

Rated voltage	690V AC
Rated current	500A...1400A
Rated breaking capacity	120kA
Operating class	aR
Minimum breaking current	3,5·In
Rated frequency	42…62Hz
Max. altitude *	2000 m
Storage temperature	-40°C ... 90°C
Operating temperature *	-40°C ... 80°C

* For altitudes higher than 2000 m it is necessary to apply a derating in maximum current (consult us).
** For ambient temperatures higher than 25ºC it is necessary to apply a derating in maximum current.

Standards

IEC/EN 60269-1
IEC/EN 60269-4
UL248-1
UL248-13
RoHS Compliant

Materials

Body	High grade ceramics
Contact blades	Copper (tin plated)
Plates	Brass (tin plated)
Screws	Zinc plated steel

Power dissipation

I_n (A)	POWER DISSIPATION In (W)	PREARCING I^2t (A^2S)	OPERATING I^2t (A^2S)
500	90	18700	137000
550	93	24900	182900
630	103	36500	269000
700	108	51500	379000
800	115	82500	600000
900	123	108000	790000
1000	129	153500	1125000
1100	142	196000	1400000
1250	155	282000	2050000
1400	177	383000	2800000

t-I characteristics

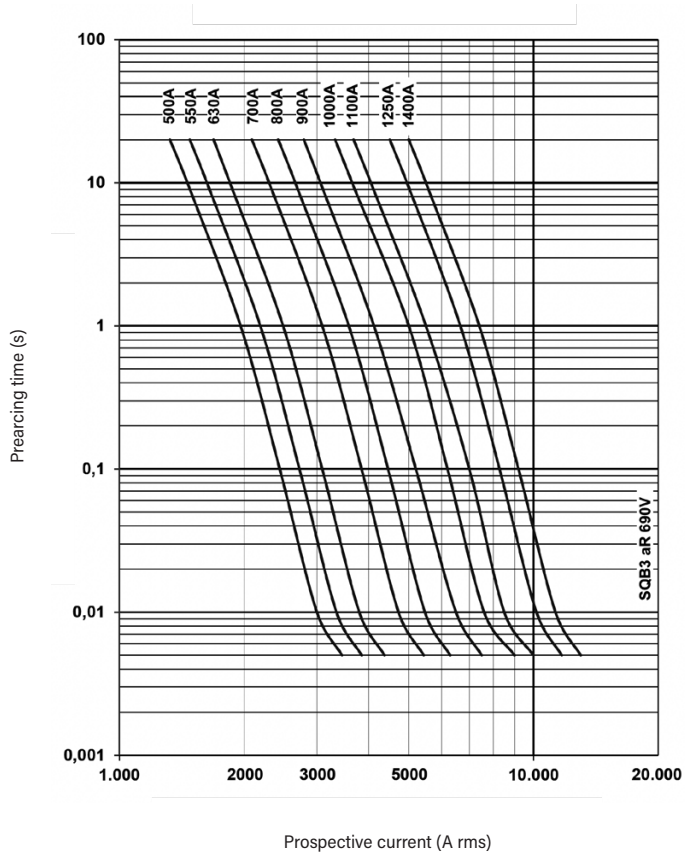

Cut-off characteristics

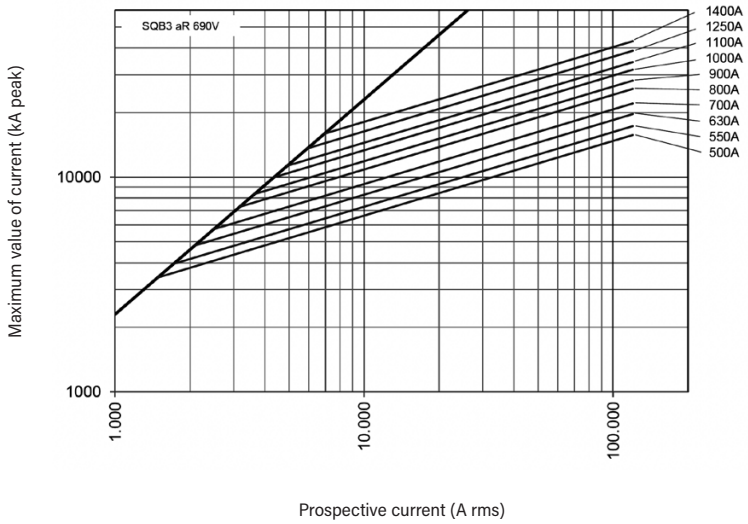

aR
SQB
square body
semiconductor protection fuse links

SQB3 | BLADE CONTACT 80mm

RAPIDPLUS

Rapidplus®

Microswitch system

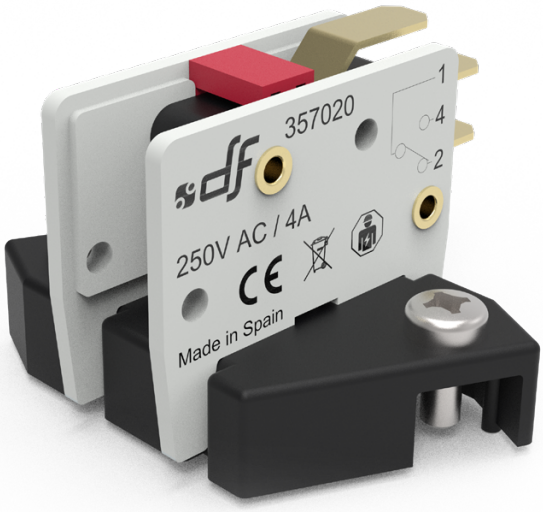

Range

REFERENCE	DESCRIPTION	PACKING Uni /BOX
357015	MICROSWITCH SYSTEM* FOR SQUARE BODY aR 690V FUSE LINKS	1/10

* Kit includes the striker support, two fixing screws and the microswitch ref. 357020

Dimensions

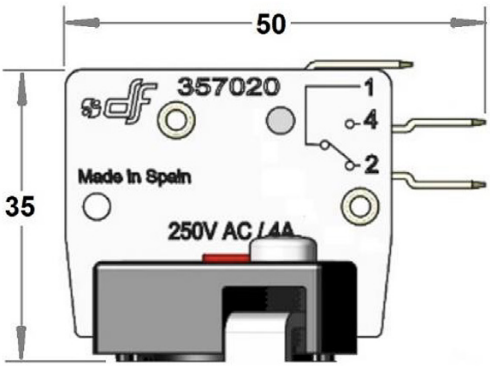

Weight 23,5gr

Technical data

Contact type	Changeover (NO-NC)
Connection	Fast-on terminals 6,3 x 0,8mm
Ambient temperature of service	-40°C ... 80°C

AC

Type of load	Maximum operating current			
	24V	48V	127V	250V
AC-12 Resistive	20A	20A	16A	16A
AC-15 Inductive	6A	6A	5A	4A

DC

Type of load	Maximum operating current			
	24V	48V	127V	250V
DC-12 Resistive	2,5A	2,5A	0,8A	0,3A
DC-13 Inductive	2,5A	1,2A	0,35A	0,2A

aR
SQB
square body
semiconductor protection fuse links

SQB3 | BLADE CONTACT 80mm

RAPIDPLUS

Rapidplus®

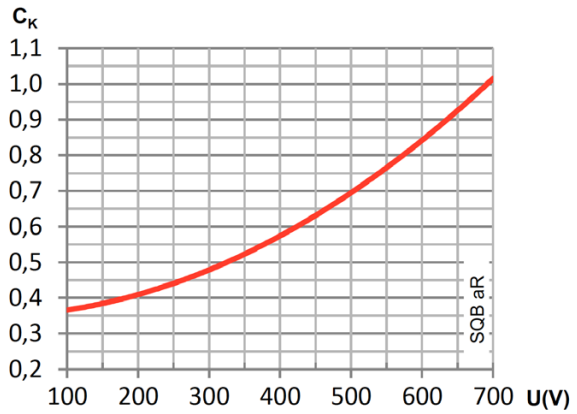

I²t Correction factor C_K

The total clearing I²t at rated voltage and at power factor of 0,15 are given in the electrical characteristics.

For other voltages, the clearing I²t is found by multipliying by correction factor, K.

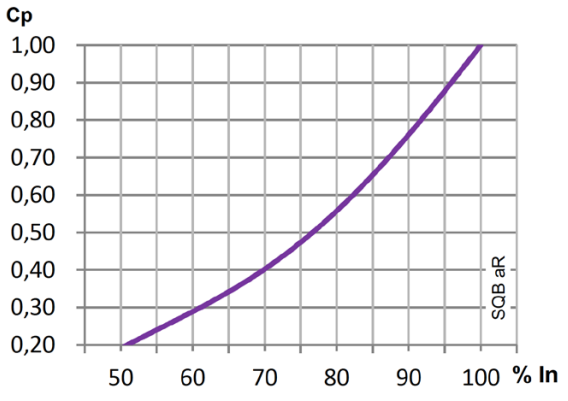

Correction factor for power loss C_p

Power dissipation values are given at rated current (In).

It is possible to calculate values of power dissipation for other currents multiplying these values by correction factor C_p for power loss as a function of % of rated current.

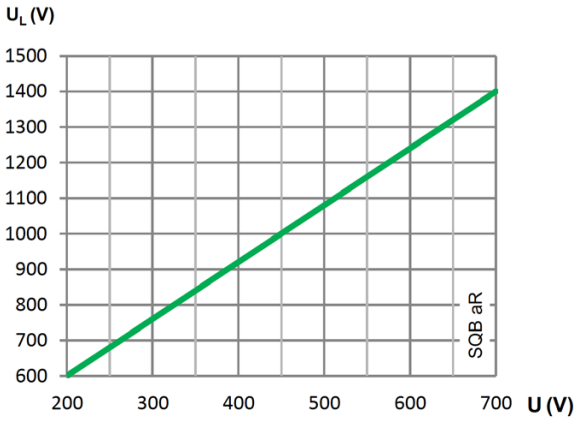

Arc voltage U_L

This graphic gives the peak arc voltage U_L that can appear across the fuse-link during operation as a function of operating voltage.

aR
SQB
square body
semiconductor protection fuse links

RAPIDPLUS

Rapidplus®

SQB3 BLADE CONTACT 80mm

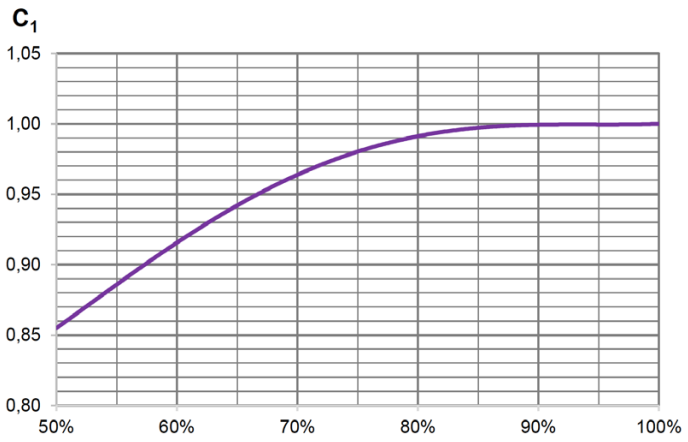

Percentage of the recommended conductor size (100% = 1,3 A/mm²)

Conductor size correction factor C_1

These fuses generate a lot of heat that is partly evacuated by thermal conduction through the conductors (cables or busbars). In some applications, the fuse will work with conductor sections lower than those used in standard type tests carried out in the laboratory according to Standard IEC/EN 60269-4, which means that the heat generated by the fuse does not be evacuated optimally.

To compensate for this lack of conduction cooling, a correction coefficient is applied. To obtain the value of the C1 coefficient from the curve, we have to calculate the current density value at which the conductors will work and determine what % of the reference value it represents.

A current density of 1.3 A/mm² is considered as the reference value (100%). In the event that the two conductors are not the same, we can use the average value of the two current density values.

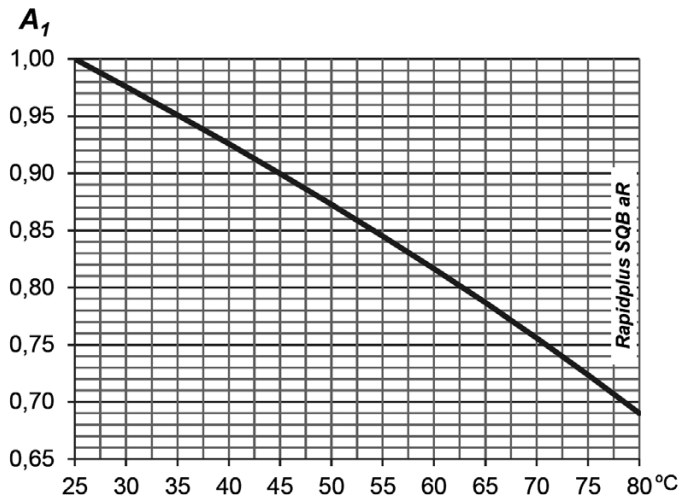

Ambient temperature derating factor A_1

Fuse link current ratings are established by type tests conducted in laboratory with an ambient temperature of 25°C.

When the utilization ambient temperature is higher than this reference value, the fuse-link must be "derated".

The rated current of fuse-link must be multiplied by a derating factor A1 to find the maximum operating current.

t_a (ºC)	A_1
25	1,00
30	0,98
35	0,95
40	0,93
45	0,90
50	0,87
55	0,84
60	0,82
65	0,79
70	0,76
75	0,72
80	0,69

Installation guidelines

Square body semiconductor fuses require correct installation to ensure proper operation.

It is very important that the contact between the fuse link and the fuse-base or the connecting busbars/cables is optimal, because in addition to the electrical contact itself, it must be taken into account that these fuses generate a lot of heat that is partially evacuated by thermal conduction through these connections.

Bad connection due to inadequate assembly or lack of maintenance may cause overheating of the fuse and could reduce the expected life of the fuse.
The use of copper conductors and busbars is recommended.

Excessive tension, compression or torsion that could be caused by a misalignment between the fuse and the connection busbars must be avoided.

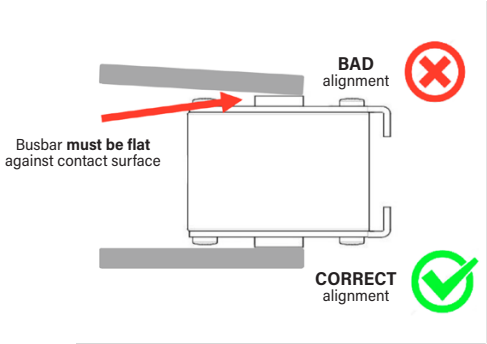

It is important to apply the correct tightening torques when mounting the fuses.

The contacts should be retightened at least once a year.

Fuse links with slotted contact knives can be mounted on special fuse bases or directly on busbars.

The connection must be made with M10 bolts and nuts. The use of washers is recommended.

If a fuse base is used, the tightening torques indicated by the manufacturer will be applied.

In case of direct mounting on busbars, a tightening torque between 30Nm and 40Nm is recommended.

In case of assembly between two busbars, these must be in the same plane, with a maximum difference of 2 mm.

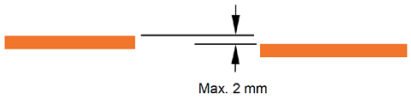

Microswitch assembly

STEP 1
Mount the striker support on the fuse

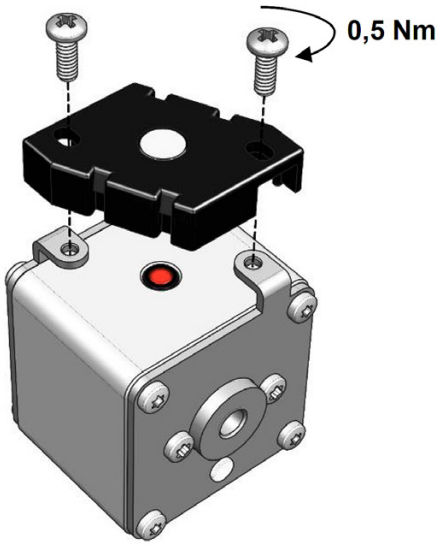

STEP 2
Clip the microswitch on the striker support

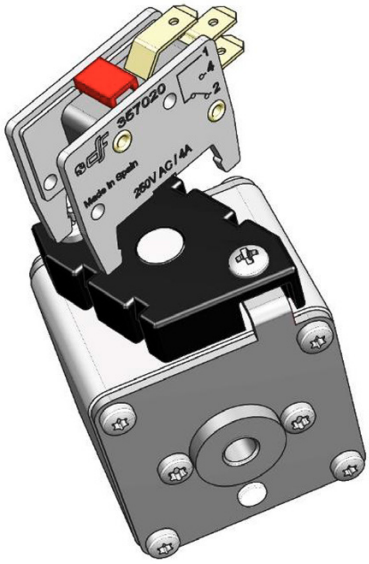

STEP 3
Connect with fast-on terminals 6,3 x 0,8mm

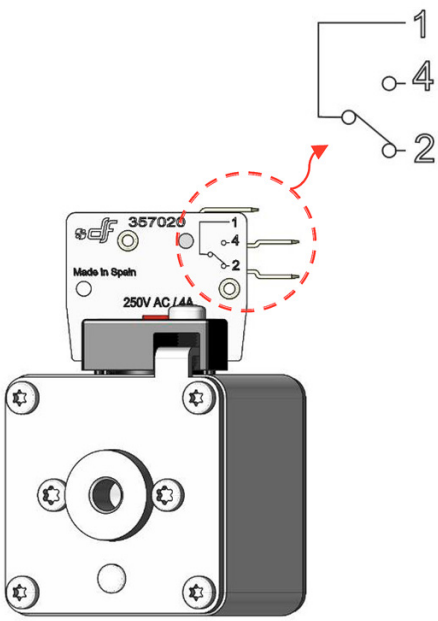

PROTECTING THE WORLD

HEAD OFFICE AND FACTORY
SILICI, 67-69
08940 CORNELLA DE LLOBREGAT
BARCELONA · SPAIN
Tel. +34 93 377 85 85
Fax +34 93 377 82 82

INTERNATIONAL SALES
Tel. +34 93 475 08 64
Fax +34 93 480 07 75
export@dfelectric.es

NATIONAL SALES
Tel. 93 475 08 64
Fax 93 480 07 76
comercial@dfelectric.es

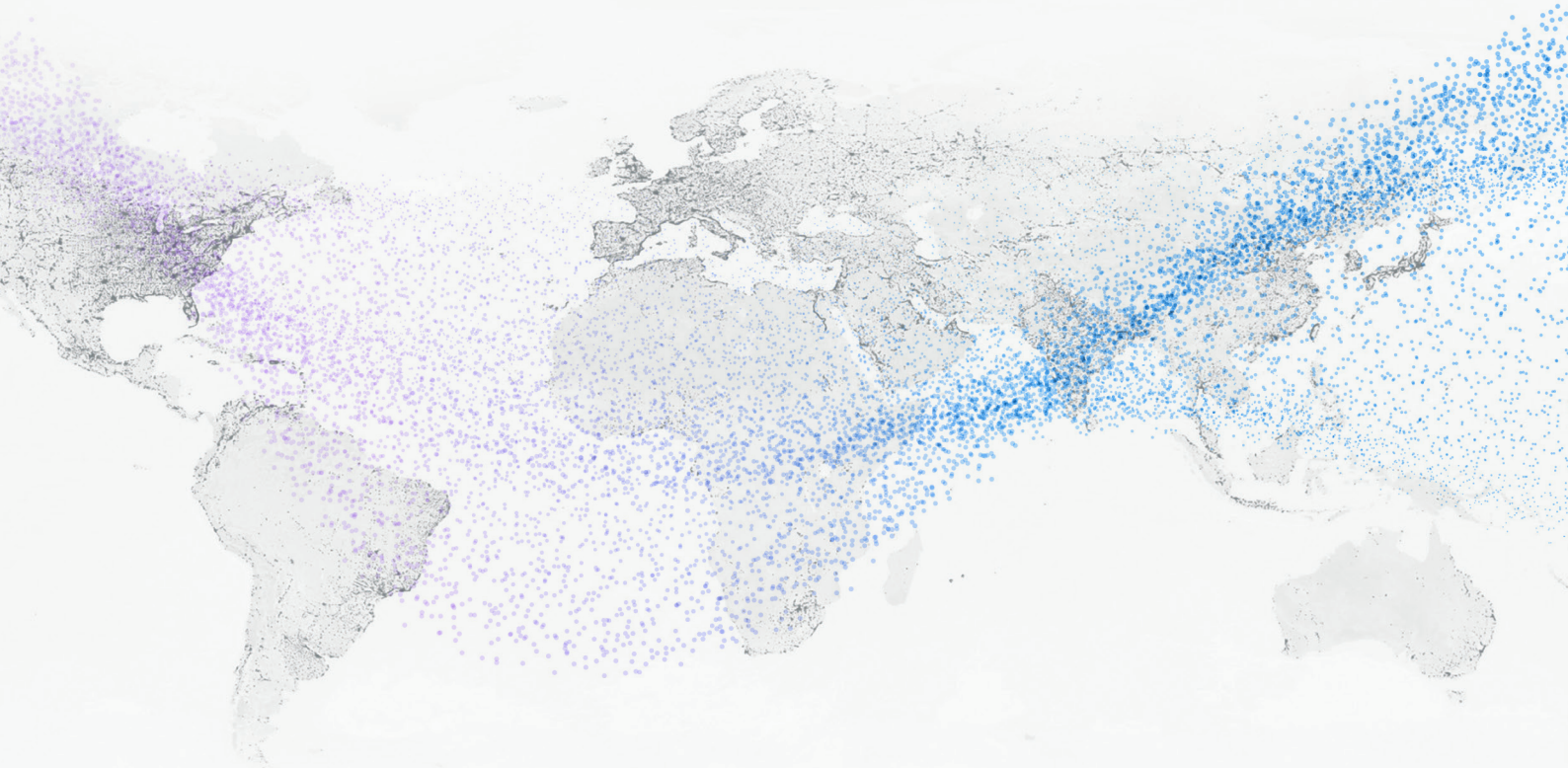

dfelectric.es

FABRICADO EN ESPAÑA · MADE IN SPAIN

According to the waste of electrical and electronic equipment directive, electrical material should not be part of the usual waste. This symbol alerts users that these products should be recycled according to local environmental waste disposal regulations.

The "electro technical expert" logo marked on the products included in this data sheet indicates that the installation of these products must be carried out by expert personnel with specialized knowledge.

To prevent electrical hazards, carry out the installation without voltage.

Safety notice
Please capture the following QR code and read our safety notice carefully before installing our products.

The data reflected in this technical record are subject to the correct installation of the product in accordance with manufacturer's instructions, relevant installation standards and professional practices, maintained and used in applications for which they were made.

The products described in this document have been designed, developed and tested in accordance with specific standard. They are considered components that are integrated as part of installation, machine or equipment. The correct general operation of the referred product is responsibility of the manufacturer of the installation, machine or equipment.

DF ELECTRIC cannot guarantee the characteristics of an installation, machine or equipment that has been designed by a third party. Once a product has been selected, the user must verify that it is appropriate for its application, through the verifications and/or tests that it deems appropriate.

DF ELECTRIC retains the right to change the dimensions, specifications, materials or design of its products at any time with or without notice.

©2025 DF Electric. All rights reserved