OEM Automatic Ltd
Address: Whiteacres, Whetstone Leicester, LE8 6ZG
0116 284 9900 | Orders@oem.co.uk | www.oem.co.uk

IDEM KLTM LOCKING SWITCH

450001
KLTM (Mechanical Only) M20 24v

- Electric release
- 4 key entry positions
- 2 x LED indicator
- Locking force up to 2000 N
- Dimensions 105 mm x 150 mm



PRODUCT DESCRIPTION

Locking switch with RAMZLOCK KLTM locking, made of cast metal, with locking force up to 2000N. The breaker head is made of stainless steel. The switch has 2 LEDs that show the status of the solenoid and the state of the blockage. It also has a rotatable head, which provides 4 key entry positions for easy and flexible mounting. The KLTM switch has a standard spacing between the mounting holes - 73 mm.
In the event of a voltage drop, the switch can be opened in an emergency without any special keys. The switch is available in the version: voltage release.

TECHNICAL DATA

Actuator	Not included
Annual usage	8 cycles per hour/24 hours per day/365 days
Approvals	ISO 13849-1, ISO 14119, EN60204-1, EN62061, EN60947-5-1, UL 508
Conduit entry	M20
Contact type	4NC safety contacts, 1NO auxiliary contact (guard open), 1NO auxiliary contact (guard locked) (selectable option for LED2 guard locked)
Contacts	4NC 2NO
Head material	Stainless steel 316
Holding force (F1Max)	3000 N
Housing material	Die cast metal
IP class	IP67
LED indication	LED1 red solenoid power on, LED2 green switch locked (if selected)
Manual operation	Standard manual release lid and side
Maximum approach / withdrawal speed	600 mm/s
Mechanical reliability B10d	2.5 x 10^6 operations at 100mA load

Mounting	2 x M5
MTTFd	356 years
Operating temperature	-25..40°C
PFHd	3.44 x 10^{-8}
PL	e acc. ISO13849-1
Rated insulation voltage	600V ac
SIL	3 acc. EN62061
Solenoid Voltage	24V ac/dc
Thermal current (Ith)	5 A
Travel for positive opening	10 mm
Utilisation category	AC15, A300, 3 A
Withstand voltage	2500V ac



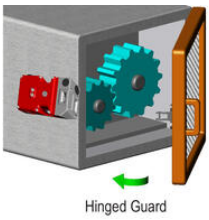

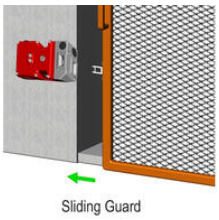



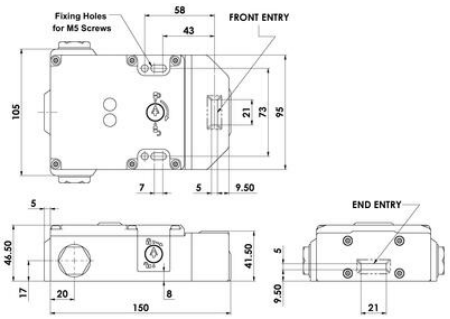

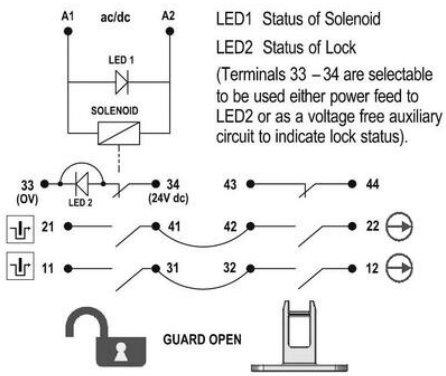

LED1 Status of Solenoid
LED2 Status of Lock
(Terminals 33 – 34 are selectable to be used either power feed to LED2 or as a voltage free auxiliary circuit to indicate lock status).

6.0 5.0 0mm

11/12	Open	
21/22	Open	
33/34		Open
43/44		Open



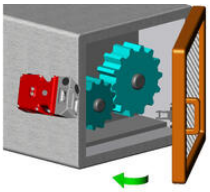

Hinged Guard

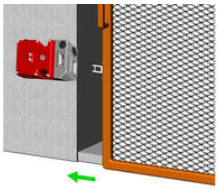

Sliding Guard



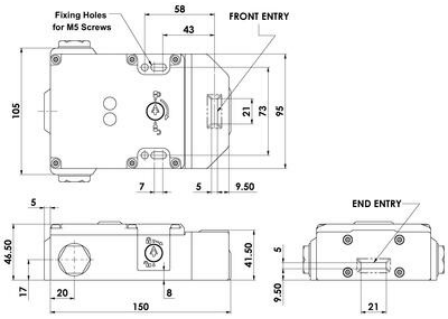

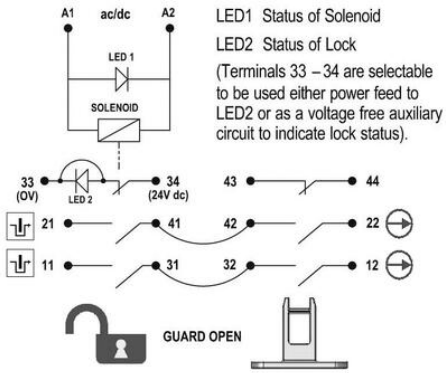

LED1 Status of Solenoid

LED2 Status of Lock

(Terminals 33 – 34 are selectable to be used either power feed to LED2 or as a voltage free auxiliary circuit to indicate lock status).

6.0 5.0 0mm

11/12	Open	
21/22	Open	
33/34		Open
43/44		Open