OEM Automatic Ltd
Address: Whiteacres, Whetstone Leicester, LE8 6ZG
0116 284 9900 | Orders@oem.co.uk | www.oem.co.uk

DEFINOX - DCX 3 MANUAL

DE-BS076F12100
Manual seat valve DCX3 L-body, 3" PFA/FKM

- Leak tightness at high temperature
- Spherical body with large wall thickness
- Can be used on a wide range of applications
- Complete interchangeability of sub-components
- 3A - EHEDG - FDA - CE approved

PRODUCT DESCRIPTION

Definox DCX3 Seat valve.
This seat valve meets the strongest requirements for process technology and is the ideal solution for Food, Brewery, Cosmetics and Pharmaceutical processes.
The seat valve design provides a wide range of options and variants.
The DCX3 is fitted as standard with a liquid PFA seal that ensures excellent cleaning of the valve.

Technical advantages:

- From DN 25 to DN 150
- PFA liquid seal, perfectly washable, ensures perfect leak tightness at high temperature and good resistance to chemical products
- Spherical body with thick walls ensures excellent resistance to expansion
- Different body configurations possible: L - T - X
- Numerous connectivity options: SMS, DIN, and clamp.
- Plug can be supplied with an elastomer seal. This solution is reccomended for applications with charged liquids.
- Pneumatic actuator - removable and easily adjustable: NO-NC-Double effect
- Can be used on a wide range of applications
- Complete interchangeability of sub-components
- Easy and fast maintenance thanks to the clamp assembly.

TECHNICAL DATA

Certificate	3.1 EN10204
Connection type	Weld ends
Description	3A - EHEDG approved
Design norm	SMS
Housing	L-Body
Housing	PFA/FKM
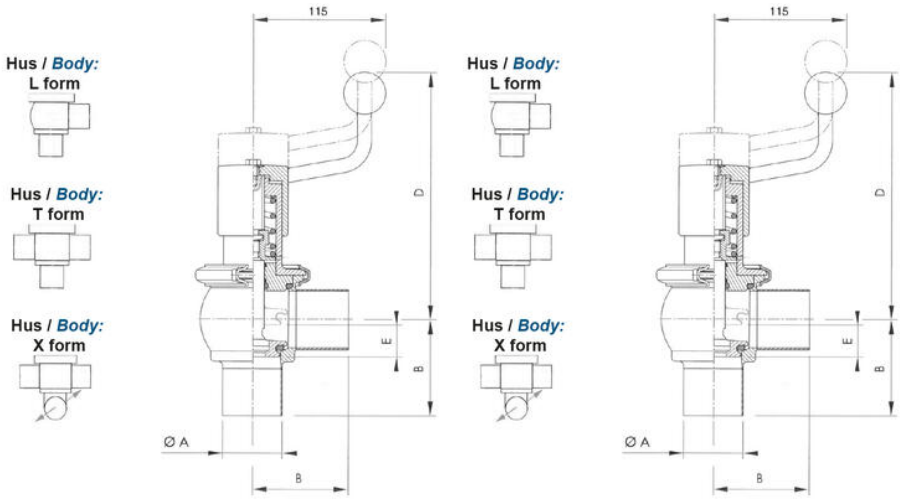
Inner diameter	72 mm
Material quality	1.4404
Operating pressure max	8 bar
Outer diameter	76 mm
Surface finish	RA<0,8/1,2µm
Temperature range	-5°C/+140°C
Weight	4.5 kg