OEM Automatic Ltd
Address: Whiteacres, Whetstone Leicester, LE8 6ZG
0116 284 9900 | Orders@oem.co.uk | www.oem.co.uk

PANEL MOUNT TIMER DIGITAL

Syr-Line Series

MDF1R10MV2
Timer MDF1 Multifunction 8pin Relay 24-240V ac/dc



- Multifunction
- Display of set and current time
- Time range 0.001 - 9999h
- Backlit LCD display

PRODUCT DESCRIPTION

Now we are launching a new series of digital time relays in the Syr-Line series from Crouzet with clear LCD display that has IP66 enclosure in the front.

The current set time and relay status are shown in the display. Time relays have many different functions as well as up and down counting to choose from.

The programming is very simple and can be locked to prevent accidental change. The time interval is adjustable from 0.001 second and up to 9999 hours and has memory function for time counting in case of potential voltage drop.
The time relays are available with one or two alternating relay outputs that can handle the entire 10A and connect into a 11-pin socket, which allows for both panel and bottom mounting.

TECHNICAL DATA

Approvals	CE, RoHS, UL
Breaking capacity	2500 VA / 300 W
Function	A, Ac, Ad, B, C, D, Di, H, L, Li
IP class front	IP66
IP class housing	IP20
Multi-function	Yes
Output	Relay 1 pole C/O
Power consumption	2.5 VA / 1 W
Storage temperature max	70 °C
Storage temperature min	-30 °C
Supply voltage	24-240V AC/DC
Switching current max	10 A
Temperature operational max	60 °C
Temperature operational min	-10 °C
Time range	0,001 s - 9999 h

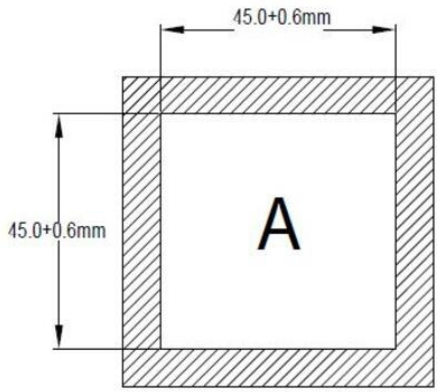
45.0+0.6mm
45.0+0.6mm
A

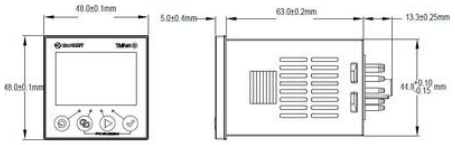
48.0±0.1mm
5.0±0.4mm
63.0±0.2mm
13.3±0.25mm
48.0±0.1mm
44.8 +0.10 -0.15 mm

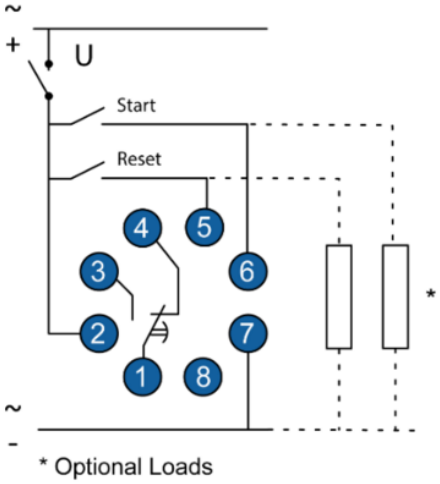
~
+
U
Start
Reset
4
5
3
6
2
7
1
8
~
-
*
* Optional Loads