OEM Automatic Ltd
Address: Whiteacres, Whetstone Leicester, LE8 6ZG
0116 284 9900 | Orders@oem.co.uk | www.oem.co.uk

STAINLESS STEEL ENCLOSURES

27604
KER 425 RA2, Stainless Steel Enclosure, 4-Pole, 25A



- 16-1600A switch ratings
- Other switch configurations available
- Hygienic and corrosion resistant
- Tested to IEC 60947-3

PRODUCT DESCRIPTION

Switch Disconnectors housed in high-quality stainless steel enclosures.
All stainless steel enclosures are IP66 rated at a minimum for robust protection against dust and water.
Available in both black/grey and yellow/red.

Stainless steel is ideal for applications where hygiene and good protection against corrosion are important.
These enclosures are also available with EMC and EMC/EX protection upon request.

Tested to IEC 60947-3.
Note! Al-cables cannot be connected directly to switch terminals. For Al-cable connection please use a bi-metal cable connector.

TECHNICAL DATA

GENERAL DATA

Number of poles	4
Rated insulation voltage Ui	800 V
Rated thermal current, Ith	40 A
Enclosure dimensions	160x120x77mm
Terminals / Bolt size Cu	1.5-16
Nominal values with cable size	10
Weight	1.3 kg

RATED OPERATIONAL CURRENT, IE

Operational current - AC-21A - 400/415V	25 A
Operational current - AC-21A - 500V	25 A

Operational current - AC-21A - 690V	25 A
Operational current - AC-22A - 400/415V	25 A
Operational current - AC-22A - 500V	25 A
Operational current - AC-22A - 690V	25 A
Operational current - AC-23A - 400/415V	25 A
Operational current - AC-23A - 500V	25 A
Operational current - AC-23A - 690V	25 A

RATED OPERATIONAL POWER FOR 3-PHASE (1500 R.P.M.) SQUIRREL CAGE INDUCTION MOTORS (KW)

Operational power - AC-23A - 400/415V	11 kW
Operational power - AC-23A - 500V	15 kW
Operational power - AC-23A - 690V	22 kW

RATED FUSED SHORT CIRCUIT CURRENT

Back-up fuse	25 A
6339_R.M.S value, IK (kA)	50
Peak value	3.8 kA
Rated impulse withstand voltage Uimp	8 kV
5530_Rated short circuit making capacity at 690V, Icm (kA)	1
5809_Rated short time withstand current at 690V (1 s), Icw (kA)	0.7

RATED BREAKING CAPACITY, ICN

Breaking capacity - AC-23A - 400/415V	200 A
Breaking capacity - AC-23A - 500V	200 A
Breaking capacity - AC-23A - 690V	200 A

ADDITIONAL DETAILS

Electrical endurance	3000 operations
Mechanical endurance	50000 operations
4950_Max terminal torque (Nm)	1.8
Tariff code	85365080
Country of origin	FI

Switch colour	Black/grey

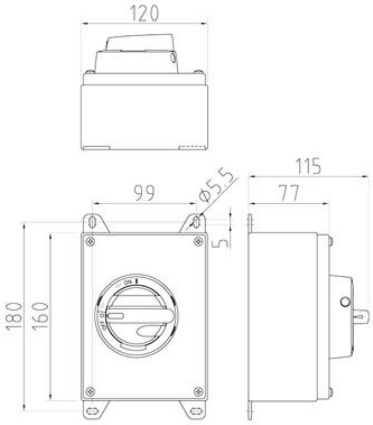
120
115
99
77
ø5.5
5
180
160