OEM Automatic Ltd
Address: Whiteacres, Whetstone Leicester, LE8 6ZG
0116 284 9900 | Orders@oem.co.uk | www.oem.co.uk

ABS ENCLOSURES

27709
KEM 310 M2ABS, ABS Enclosure, 3-Pole, 10A



- 10-630A switch ratings
- Other switch configurations available
- Recommended for indoor installation only
- Tested to IEC 60947-3

PRODUCT DESCRIPTION

Switch Disconnectors housed in high-quality ABS enclosures.
All ABS enclosures are IP65 rated at a minimum for robust protection against dust and water.
Available in both black/grey and yellow/red.

These enclosures are made from recyclable ABS plastic which provides excellent insulating properties and good resistance against many chemicals.

Tested to IEC 60947-3.
Note! Al-cables cannot be connected directly to switch terminals. For Al-cable connection please use a bi-metal cable connector.

TECHNICAL DATA

GENERAL DATA

Number of poles	3
Rated insulation voltage Ui	800 V
Rated thermal current, Ith	20 A
Enclosure dimensions	130x96x106mm
Terminals / Bolt size Cu	1.5-16
Nominal values with cable size	2.5
Weight	0.4 kg

RATED OPERATIONAL CURRENT, IE

Operational current - AC-21A - 400/415V	20 A
Operational current - AC-21A - 500V	20 A

Operational current - AC-21A - 690V	20 A
Operational current - AC-22A - 400/415V	10 A
Operational current - AC-22A - 500V	10 A
Operational current - AC-22A - 690V	10 A
Operational current - AC-23A - 400/415V	10 A
Operational current - AC-23A - 500V	10 A
Operational current - AC-23A - 690V	10 A

RATED OPERATIONAL POWER FOR 3-PHASE (1500 R.P.M.) SQUIRREL CAGE INDUCTION MOTORS (KW)

Operational power - AC-23A - 400/415V	5.5 kW
Operational power - AC-23A - 500V	5.5 kW
Operational power - AC-23A - 690V	7.5 kW

RATED FUSED SHORT CIRCUIT CURRENT

Back-up fuse	63 A
6339_R.M.S value, IK (kA)	50
Peak value	7.2 kA
Rated impulse withstand voltage Uimp	8 kV
5530_Rated short circuit making capacity at 690V, Icm (kA)	2.5
5809_Rated short time withstand current at 690V (1 s), Icw (kA)	1.7

RATED BREAKING CAPACITY, ICN

Breaking capacity - AC-23A - 400/415V	80 A
Breaking capacity - AC-23A - 500V	80 A
Breaking capacity - AC-23A - 690V	80 A

ADDITIONAL DETAILS

Electrical endurance	3000 operations
Mechanical endurance	50000 operations
4950_Max terminal torque (Nm)	1.8
Tariff code	85365080
Country of origin	FI

Switch colour	Black/grey

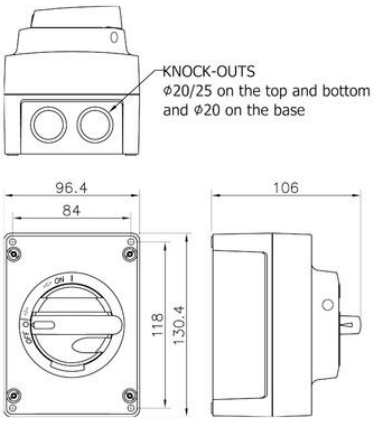
0
KNOCK-OUTS
ϕ20/25 on the top and bottom
and ϕ20 on the base
96.4
84
106
118
130.4
ON
OFF