OEM Automatic Ltd
Address: Whiteacres, Whetstone Leicester, LE8 6ZG
0116 284 9900 | Orders@oem.co.uk | www.oem.co.uk

PAINTED STEEL ENCLOSURES

44369
KET 316 T3, Sheet Steel Enclosure, 3-Pole, 16A



- 16-1600A switch ratings
- Other switch configurations available
- Excellent insulating properties
- Tested to IEC 60947-3

PRODUCT DESCRIPTION

Switch Disconnectors housed in high-quality sheet steel enclosures.
All sheet steel enclosures are IP66 rated at a minimum for robust protection against dust and water.
Available in both black/grey and yellow/red.

Tested to IEC 60947-3.
Note! Al-cables cannot be connected directly to switch terminals. For Al-cable connection please use a bi-metal cable connector.

TECHNICAL DATA

GENERAL DATA

Number of poles	3
Rated insulation voltage Ui	800 V
Rated thermal current, Ith	25 A
Enclosure dimensions	200x150x120mm
Terminals / Bolt size Cu	1.5-16
Nominal values with cable size	4
Weight	2.1 kg

RATED OPERATIONAL CURRENT, IE

Operational current - AC-21A - 400/415V	25 A
Operational current - AC-21A - 500V	25 A
Operational current - AC-21A - 690V	25 A
Operational current - AC-22A - 400/415V	16 A

Operational current - AC-22A - 500V	16 A
Operational current - AC-22A - 690V	16 A
Operational current - AC-23A - 400/415V	16 A
Operational current - AC-23A - 500V	16 A
Operational current - AC-23A - 690V	16 A

RATED OPERATIONAL POWER FOR 3-PHASE (1500 R.P.M.) SQUIRREL CAGE INDUCTION MOTORS (KW)

Operational power - AC-23A - 400/415V	7.5 kW
Operational power - AC-23A - 500V	7.5 kW
Operational power - AC-23A - 690V	11 kW

RATED FUSED SHORT CIRCUIT CURRENT

Back-up fuse	25 A
6339_R.M.S value, IK (kA)	50
Peak value	3.8 kA
Rated impulse withstand voltage Uimp	8 kV
5530_Rated short circuit making capacity at 690V, Icm (kA)	1
5809_Rated short time withstand current at 690V (1 s), Icw (kA)	0.7

RATED BREAKING CAPACITY, ICN

Breaking capacity - AC-23A - 400/415V	128 A
Breaking capacity - AC-23A - 500V	128 A
Breaking capacity - AC-23A - 690V	128 A

ADDITIONAL DETAILS

Electrical endurance	3000 operations
Mechanical endurance	50000 operations
4950_Max terminal torque (Nm)	1.8
Tariff code	85365080
Country of origin	FI

Switch colour	Black/grey

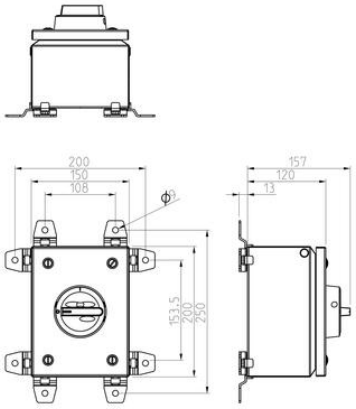
200
150
108
ϕ
153.5
200
250
157
120
13