OEM Automatic Ltd
Address: Whiteacres, Whetstone Leicester, LE8 6ZG
0116 284 9900 | Orders@oem.co.uk | www.oem.co.uk

ATEX RATED SWITCH DISCONNECTORS

31543
Aluminium 4-Pole, 100A A4EX 2XM40PEX KST16MEX

- Conform to EN 60079-0, EN 60079-31, and Directive 2014/34/EU
- Suitable for use in Zone 22
- IP66
- Temperature range from -20C to 40C

PRODUCT DESCRIPTION

TECHNICAL DATA

GENERAL DATA

Rated insulation voltage Ui	800 V
Rated thermal current, Ith	125 A
Terminals / Bolt size Cu	6-70

RATED OPERATIONAL CURRENT, IE

Operational current - AC-21A - 400/415V	125 A
Operational current - AC-21A - 500V	125 A
Operational current - AC-21A - 690V	125 A
Operational current - AC-22A - 400/415V	100 A
Operational current - AC-22A - 500V	100 A
Operational current - AC-22A - 690V	100 A
Operational current - AC-23A - 400/415V	100 A
Operational current - AC-23A - 500V	63 A
Operational current - AC-23A - 690V	63 A

RATED FUSED SHORT CIRCUIT CURRENT

6339_R.M.S value, IK (kA)	65

Rated impulse withstand voltage Uimp	8 kV
5530_Rated short circuit making capacity at 690V, Icm (kA)	8
5809_Rated short time withstand current at 690V (1 s), Icw (kA)	5

RATED BREAKING CAPACITY, ICN

Breaking capacity - AC-23A - 400/415V	640 A
Breaking capacity - AC-23A - 500V	504 A
Breaking capacity - AC-23A - 690V	504 A

ADDITIONAL DETAILS
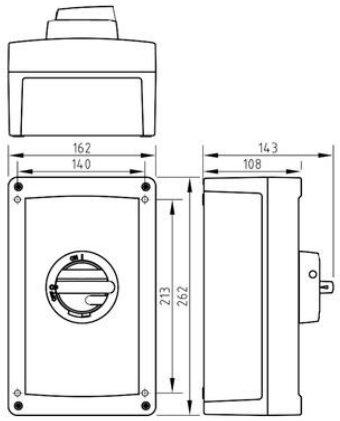
Electrical endurance	2000
Mechanical endurance	16000
4950_Max terminal torque (Nm)	6