OEM Automatic Ltd
Address: Whiteacres, Whetstone Leicester, LE8 6ZG
0116 284 9900 | Orders@oem.co.uk | www.oem.co.uk

REDUNDANT MODULE 20 A PIANO SERIES

PIRD20.241
Redundancy Module 2 x 9-35V dc 10A I/P 12-28V dc 20A O/P



- 39 mm wide
- Two diodes
- Screw terminals
- Cost effective solution

PRODUCT DESCRIPTION

The PIRD20.241 is a redundancy module, which can be used to build 1+1 and N+1 redundant systems. It is equipped with two input channels, which can be connected to power supplies with up to 10A output current and one output, which can carry nominal currents up to 20A. The module is suitable for power supplies with constant current overload behavior as well as any kind of “hiccup” overload behavior. The PIRD20.241 is the perfect solution to use in a redundant system, if the power supply itself is equipped with a DC-OK signal. Another application for this redundancy module is to separate sensitive loads from non-sensitive loads. This avoids the distortion of the power quality for the sensitive loads which can cause controller failures.

TECHNICAL DATA

INPUT DATA

Input voltage dc	12-28 V
Input voltage dc min	9 V DC
Input voltage dc max	35 V DC
Input current per channel max	10 A

OUTPUT DATA

Output voltage	24 V DC
Output current	20 A
Output current max	26 A

DIMENSIONS

Width	39 mm

Height	124 mm
Depth	124 mm
Weight	0.28 kg

OTHER

Input / Output Separation	Diode
Approvals	ATEX, CE, CSA, IECEx, UL
IP class	IP20
Material protection	ABS plastic
Series	Piano
Voltage drop over semiconductor	560 mV
Temperature min without derating	-40 °C
Temperature max without derating	55 °C

Type Power Supply	Redundancy modules

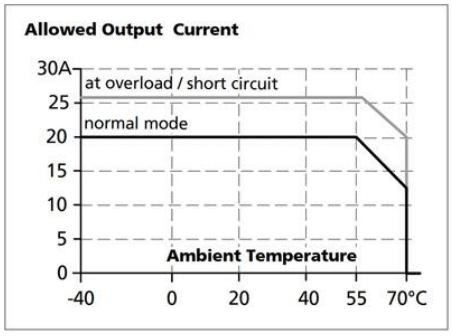



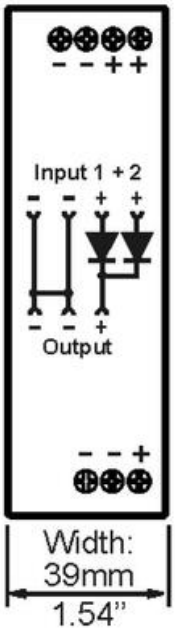

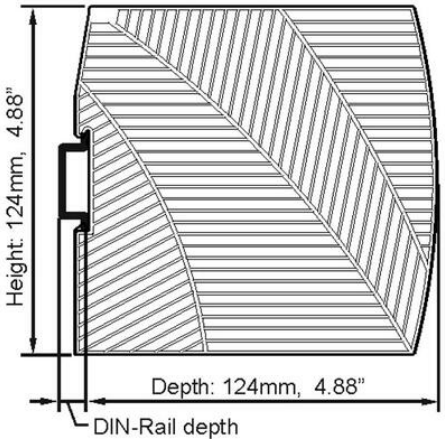
Height: 124mm, 4.88”
Depth: 124mm, 4.88”
DIN-Rail depth

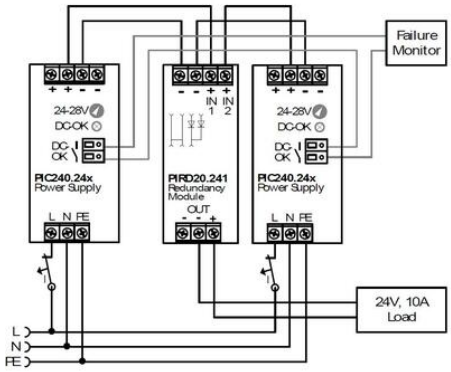
Failure Monitor
24-28V
DC-OK
DC OK
PIC240.24x
Power Supply
L N FE
IN 1 IN 2
PIRD20.241
Redundancy Module
OUT
24V, 10A Load
L
N
FE

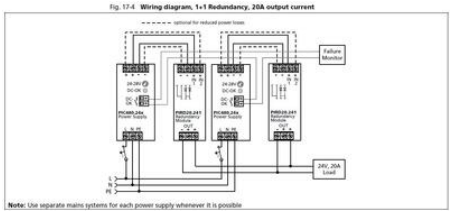
Fig. 17-4 Wiring diagram, 1+1 Redundancy, 20A output current
Note: Use separate mains systems for each power supply whenever it is possible

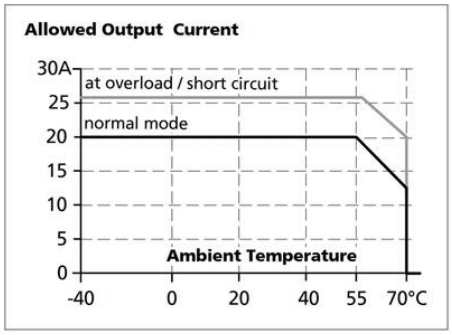
Allowed Output Current
30A
25
20
15
10
5
0
at overload / short circuit
normal mode
Ambient Temperature
-40
0
20
40
55
70°C


Input 1 + 2
Output
PULS
PIANO
PIRD 20.241
Redundancy
Module
Output
DC 12-28V 20A

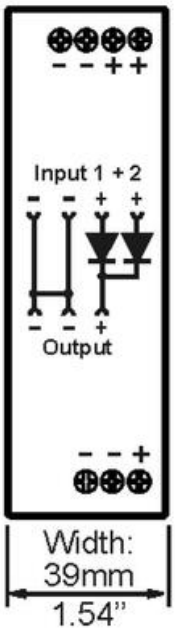
Input 1 + 2
Output
Width:
39mm
1.54”

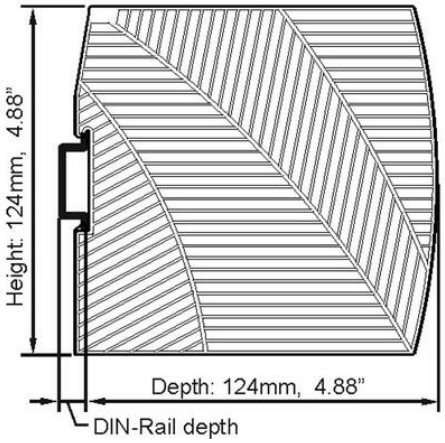
Height: 124mm, 4.88”
Depth: 124mm, 4.88”
DIN-Rail depth

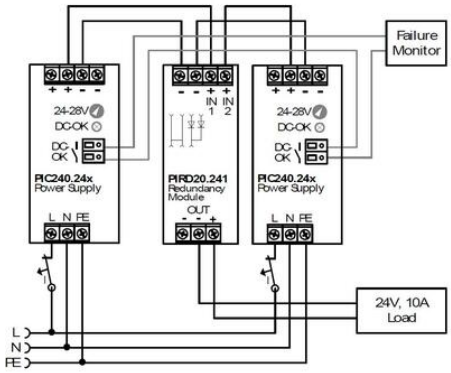
Failure Monitor
24-28V
DC-OK
DC OK
PIC240.24x
Power Supply
L N FE
IN 1 IN 2
PIRD20.241
Redundancy Module
OUT
24V, 10A Load
L
N
FE

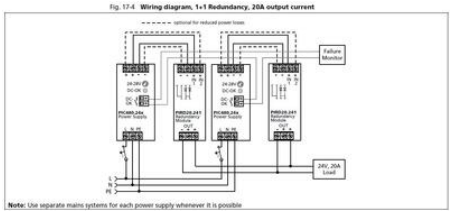
Fig. 17-4 Wiring diagram, 1+1 Redundancy, 20A output current
Note: Use separate mains systems for each power supply whenever it is possible