OEM Automatic Ltd
Address: Whiteacres, Whetstone Leicester, LE8 6ZG
0116 284 9900 | Orders@oem.co.uk | www.oem.co.uk

DC-DC CONVERTER 48/48 V DC

48/48 V DC, 5 A

CD10.482
DC/DC Converter 48/48 V DC, 5 A



- Width 42 mm
- 95,1% efficiency
- 20% power reserve
- Galvanically separated SELV/PELV output

PRODUCT DESCRIPTION

The CD10.482 is a DIN-rail mountable DC/DC converter of the DIMENSION series which provides a floating, stabilized and galvanically separated SELV/PELV output voltage.

The CD-Series is part of the DIMENSION power supply family. The most outstanding features of CD10.482 are the high efficiency, the small size and the wide operational temperature range.

The CD-Series includes all the essential basic functions. The devices have a power reserve of 20% included, which may even be used continuously at temperatures up to +45°C.

High immunity to transients and power surges as well as low electromagnetic emission and a large international approval package for a variety of applications makes this unit suitable for nearly every situation.

TECHNICAL DATA

INPUT DATA

Input voltage dc	48 V
Input voltage dc min	36 V DC
Input voltage dc max	60 V DC
Input capacitance	1650 µF
Inrush current	Typ. 7 A @ 48 V DC
Max entrance tripple	10 V pp

OUTPUT DATA

Output voltage	48 V DC
Output voltage min	48 V DC

Output voltage max	56 V DC
Output current	5 A
Power	240 W

EFFICIENCY / LIFETIME / MTBF

Efficiency	95.1 %
Life span	160 000 h @ 48 V DC, 5 A, 40 °C
MTBF (IEC 61709)	tbd

DIMENSIONS

Width	42 mm
Height	124 mm
Depth	117 mm
Weight	0.5 kg

OTHER

Approvals	CE, UL
Keep time	Typ. 7,7 ms @ 48 V DC
IP class	IP20
Clamp type	Screw
Material protection	Aluminium
Ripple max	50 mV pp
Series	Dimension C
Power drop from +60 °C to + 70 °C	6 W/°C
Temperature min without derating	-25 °C
Temperature max without derating	60 °C
Startup delay	350 ms

Type Power Supply	DC-DC

Fig. 15-1 **Output current vs. ambient temp.**

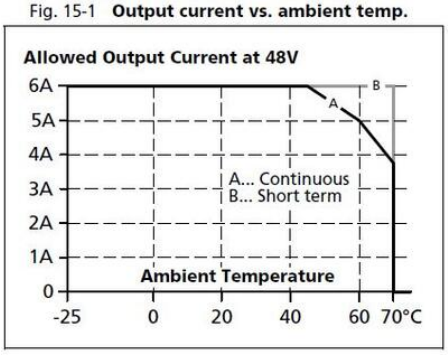

Fig. 8-1 **Efficiency vs. output current at 48V output and 48Vdc input voltage, typ.**

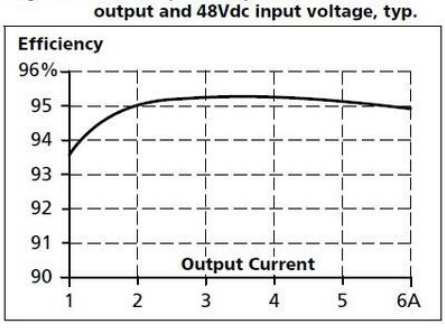

Fig. 10-1 **Front side**



Fig. 20-1 **Front view**

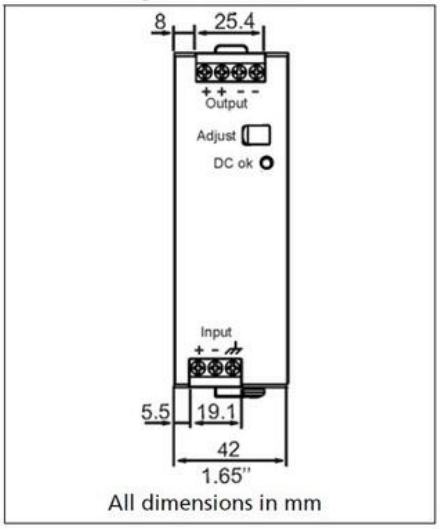

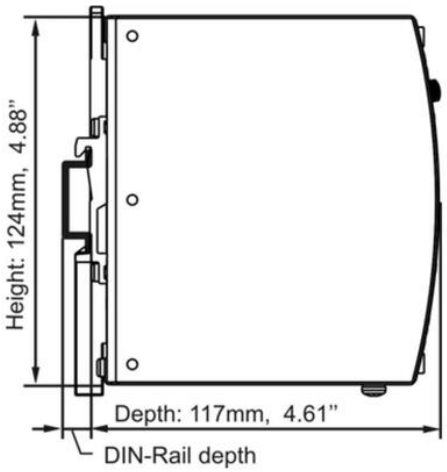

Fig. 15-1 **Output current vs. ambient temp.**

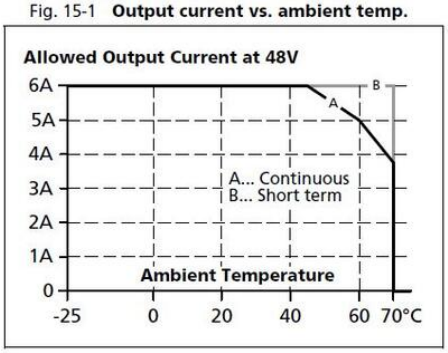

Fig. 8-1 **Efficiency vs. output current at 48V output and 48Vdc input voltage, typ.**

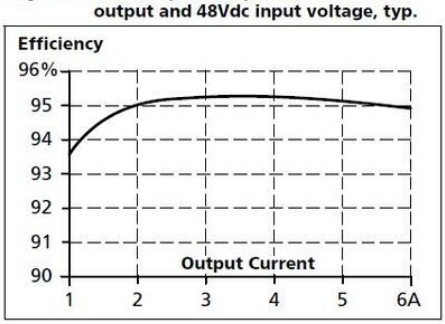

Fig. 10-1 **Front side**



Fig. 20-1 **Front view**

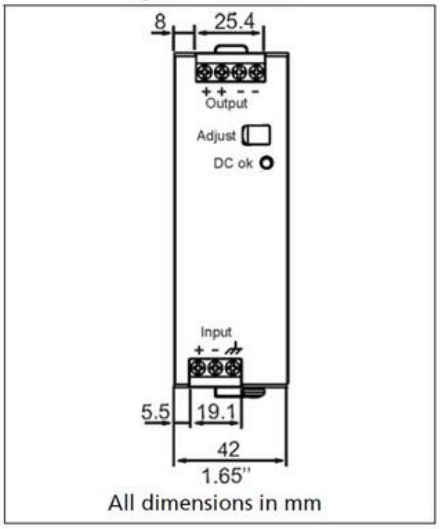

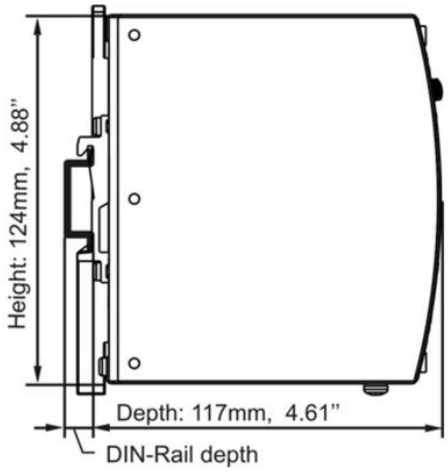
Height: 124mm, 4.88"
Depth: 117mm, 4.61"
DIN-Rail depth