OEM Automatic Ltd
Address: Whiteacres, Whetstone Leicester, LE8 6ZG
0116 284 9900 | Orders@oem.co.uk | www.oem.co.uk

BATTERY HOLDER FOR DC-UPS

UZO12.07
12V 7Ah Battery Holder for UB10

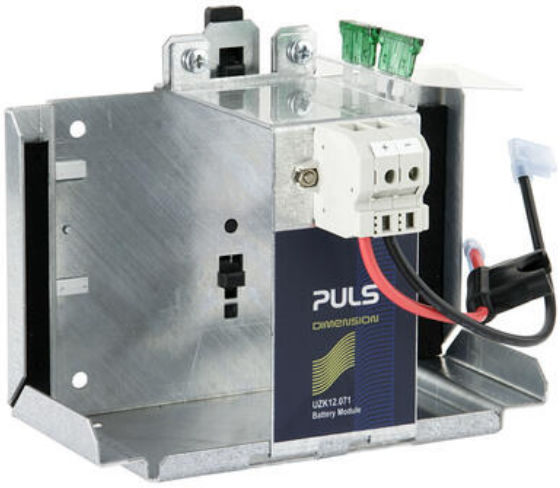

- 1-battery concept
- Easy to assemble
- Two mounting options: DIN rail or panel/wall mounting
- Easy access to the terminals and the fuse

PRODUCT DESCRIPTION

Introducing our PULS DC-UPS Battery Holders. For use with UB10.241, UB10.242, and UB10.245 batteries, the UZO12.07 is tailored for 7Ah battery NP7-12, while the UZO12.26 suits 24Ah batteries, including NP24-12I, NPL24-12I, and SWL750. If you're working with UB20.241 and UB40.241 batteries, the UZO24.071 is the perfect fit for 2x7Ah NP7-12 batteries, and the UZO24.121 is designed for 2x12Ah NP12-12 batteries. Plus, the UZS24.100 Temperature Sensor Board, included with UZO24.071 and UZO24.121 models, optimizes battery life for your applications. For ATEX-compliant models, explore the UZK series. Enjoy a hassle-free power solution with PULS DC-UPS Battery Holders, complete with fuse holders and fuses to ensure seamless performance.

TECHNICAL DATA

DIMENSIONS

Width	155 mm
Height	124 mm
Depth	112 mm
Weight	0.6 kg

Type Power Supply	Accessories

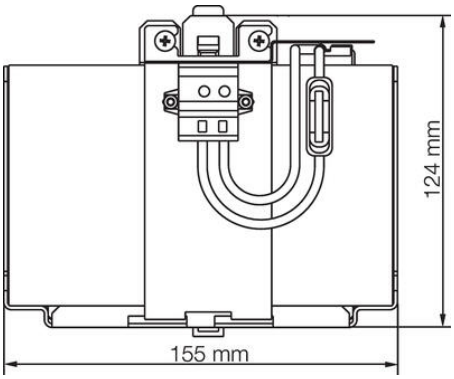

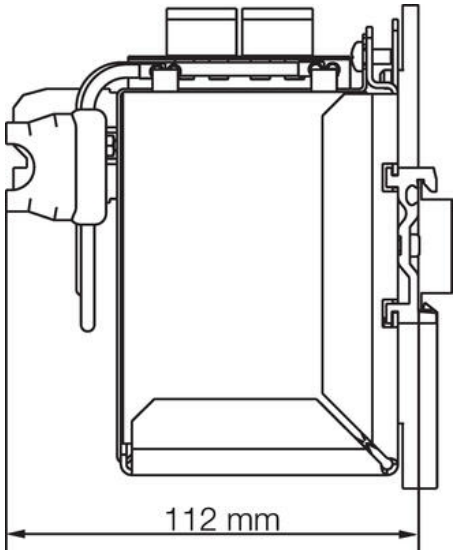
112 mm