OEM Automatic Ltd
Address: Whiteacres, Whetstone Leicester, LE8 6ZG
0116 284 9900 | Orders@oem.co.uk | www.oem.co.uk

DC-DC CONVERTER 600/24 V DC

600/24 V DC, 20 A

QTD20.241
PSU 600V dc I/P 24V dc 20A 480W O/P



- Optimized for intermediate DC-bus of Drive Systems
- 20 A
- 65 mm wide
- Up to 95% efficiency
- Integrated primary fuses

PRODUCT DESCRIPTION

The DC-DC converter is optimized to connect on the frequency converter's dc bus/stage. This voltage is usually not filtered, has high EMI interference and leaves high leakage currents. The converter has a very robust input stage and filter, which provides safe operation even at very disturbing power supply. Duplicate 600V dc fuses are built-in, which saves space and money. At power outages, the motors act as generators and reset voltage to the frequency converter capacitors which, in turn, output voltage to the dc-dc converter. This means that 24V dc is maintained and a controlled stop can be performed.
The bonus effect gives 25% extra reserve with retained 24V which is an advantage when connected loads have high starting current.
The converter has polarity protection and minimal input current. In addition, there is a relay output (dc OK) that falls when the output voltage deviates more than 10% from the set value.

TECHNICAL DATA

INPUT DATA

Input voltage dc	600 V
Input voltage dc min	480 V DC
Input voltage dc max	840 V DC
Inrush current	Typ. 1,6 A @ 600 V DC
Max entrance tripple	50 V pp

OUTPUT DATA

Output voltage	24 V DC
Output voltage min	24 V DC
Output voltage max	28 V DC
Output current	20 A
Power	480 W

EFFICIENCY / LIFETIME / MTBF

Efficiency	95 %
Life span	42000 h @ 24 V DC, 20 A, 40 °C
MTBF (IEC 61709)	446000 h @ 24 V DC, 20 A, 40 °C

DIMENSIONS

Width	65 mm
Height	124 mm
Depth	127 mm
Weight	0.89 kg

OTHER

Approvals	CE, CSA, UL
Keep time	Typ. 22 ms @ 600 V DC
IP class	IP20
Clamp type	Spring-clamp
Material protection	Aluminium
Ripple max	100 mV pp
Series	Dimension Q
Power drop from +60 °C to + 70 °C	12 W/°C
Temperature min without derating	-25 °C
Temperature max without derating	60 °C
Startup delay	350 ms

Type Power Supply	DC-DC
Active Transient	Yes
DC relay output	Yes

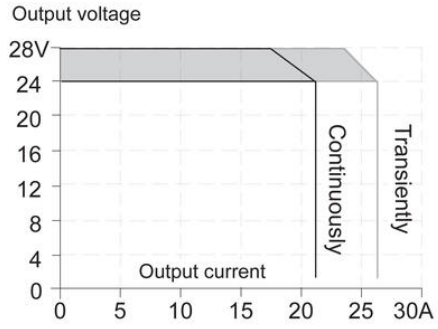

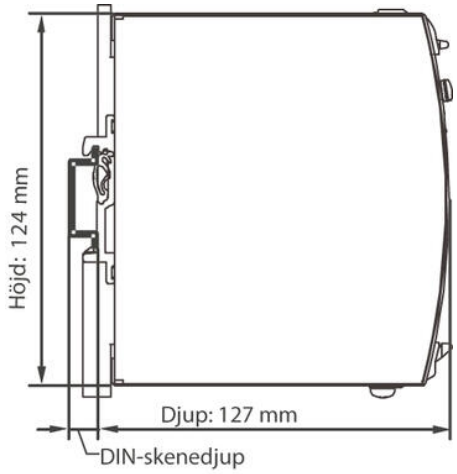
Höjd: 124 mm
Djup: 127 mm
DIN-skenedjup


13.5
38.1
+ + - -
24-28V
DC ok
Overload
PE
14
28.6
Bredd

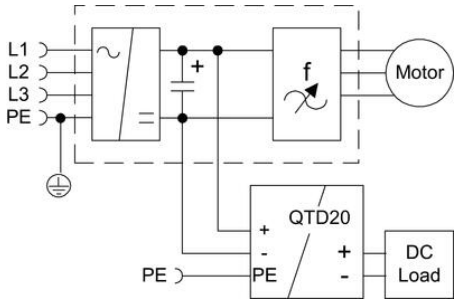
L1
L2
L3
PE
f
Motor
QTD20
+
-
PE
+
-
DC
Load

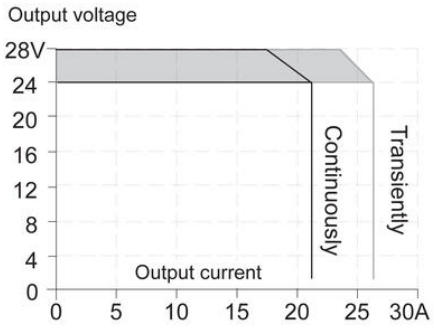
Output voltage
28V
24
20
16
12
8
4
0
Continuously
Transiently
Output current
0
5
10
15
20
25
30A

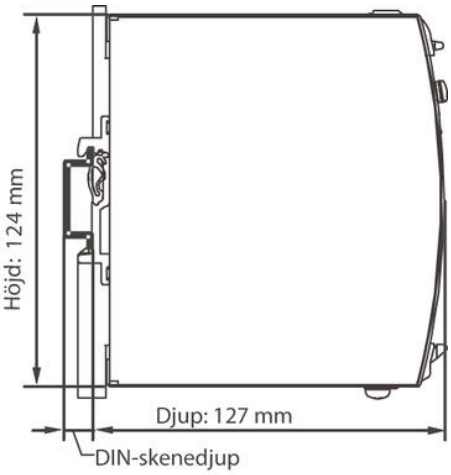
Höjd: 124 mm
Djup: 127 mm
DIN-skenedjup


13.5
38.1
+ + - -
24-28V
DC ok
Overload
PE
14
28.6
Bredd

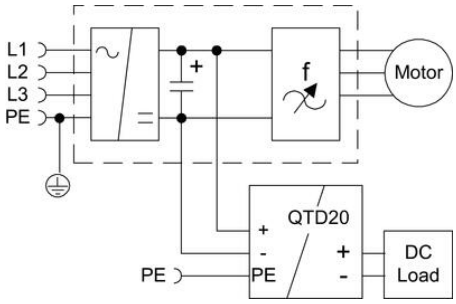
L1
L2
L3
PE
f
Motor
QTD20
+
-
PE
+
-
DC
Load