OEM Automatic Ltd
Address: Whiteacres, Whetstone Leicester, LE8 6ZG
0116 284 9900 | Orders@oem.co.uk | www.oem.co.uk

POWER SUPPLY 1-PHASE WITH BUILT IN REDUNDANCY, 24 V DC DIMENSION C SERIES, GENERATION 2

CP10.241-R1
Redundant PSU 100-240 V AC/24 V DC, 10 A



- Output current of 10 or 20 A
- Efficiency up to 95.2%
- 20% power reserves
- Built-in decoupling mosfet for 1+1 and n+1 redundancy
- Hot-Swap

PRODUCT DESCRIPTION

Click below link to download the white paper
Efficient redundancy for power supplies

Also visit our page for Redundancy Modules

The Dimension CP-Series are cost optimized power supplies without compromising quality, reliability and performance. The most outstanding features of the CP20.241–R1/-R2/-R3 units are the high efficiency, electronic inrush current limitation, active PFC, wide operational temperature range and the extraordinary small size. The units include a decoupling MOSFET for building 1+1 or n+1 redundant power supply systems.
These redundancy power supplies come with three connection terminal options; screw terminals, spring-clamp terminals or plug connector terminals which allows replacement on an active application.
CP20.242-R2 version feature an enhanced DC input voltage range and the CP20.241-R2-C1 is additionally equipped with conformal coated pc-boards.
CP10.242-R2 version feature an enhanced DC input voltage range.
With high immunity to transients and power surges, low electromagnetic emission, a DC-OK signal contact for remote monitoring, and a large international approval package, makes this unit suitable for nearly every application.

- AC 100-240V Wide-range Input
- Width only 39 or 48 mm
- Built-in Decoupling Mosfet for 1+1 and n+1 Redundancy
- Efficiency up to 94.7%
- 20% Output Power Reserves
- Safe HiccupPLUS Overload Mode
- Easy Fuse Breaking – 3 times nominal current for 12ms
- Active Power Factor Correction (PFC)
- Minimal Inrush Current Surge
- DC-OK Relay Contact
- Current Sharing Feature Included
- 3 Year Warranty

TECHNICAL DATA

INPUT DATA

Input voltage ac	100-240 V
Input voltage ac min	85 V AC

Input voltage ac max	264 V AC
Input voltage dc	110-150 V
Input voltage dc min	88 V DC
Input voltage dc max	180 V DC
Inrush current at 120 V ac typical	6 A
Inrush current at 230 V ac typical	9 A
Input voltage range	Wide-range
Power factor at 120 V ac, full load. Typical	0.99
Power factor at 230 V ac, full load. Typical	0.97
Number of phases	1

OUTPUT DATA

Output voltage	24 V DC
Output voltage min	24 V DC
Output voltage max	28 V DC
Output current	10 A
Power	240 W

EFFICIENCY / LIFETIME / MTBF

Efficiency at 120 V ac, full load, typical	93 %
Efficiency at 230 V ac, typical	93.9 %
Efficiency at 230 V ac, full load, typical	94.7 %
Lifetime at 120 V ac, full load and +40 ° C	78000 h
Lifetime at 230 V ac, full load and +40 ° C	109000 h
MTBF (IEC 61709) 230 V ac, max load, 40 ° C	641000 h

DIMENSIONS

Width	39 mm
Height	124 mm
Depth	117 mm
Weight	0.6 kg

OTHER

Approvals	ATEX, CE, CSA US, cULus, IECEx
Hold time at 120 V ac, typical full load	37 ms
Hold time at 230 V ac, typical full load	37 ms
IP class	IP20

Clamp type	Spring-clamp
Material protection	Aluminium
Supply frequency	50-60 ±6 %
Ripple max	50 mV pp
Series	Dimension C
Power consumption 120 V ac	2.17 A
Power consumption 230 V ac	1.14 A
Power drop from +60 °C to + 70 °C	6 W/°C
Temperature min without derating	-25 °C
Temperature max without derating	60 °C

Active Transient	Yes
DC relay output	Yes

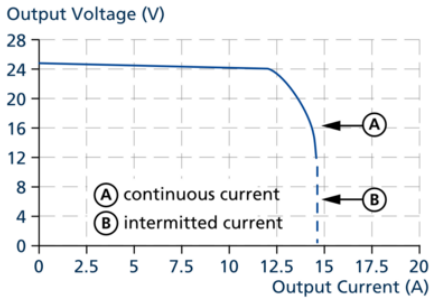

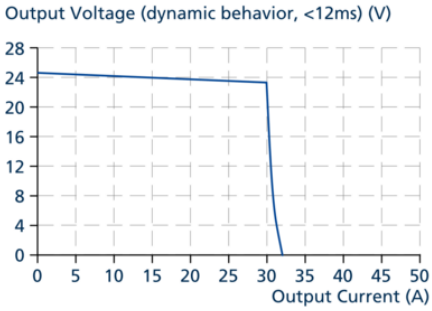

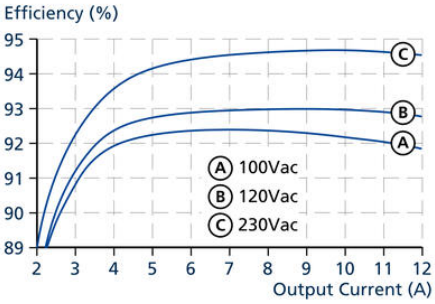

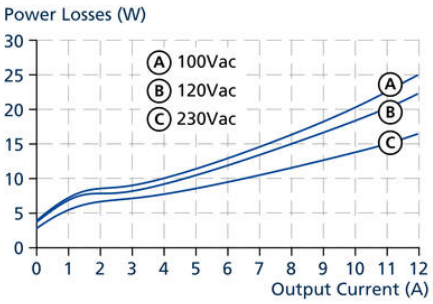

Maximal wire length*) for a fast (magnetic) tripping:

	0.75mm²	1.0mm²	1.5mm²	2.5mm²
C-2A	30 m	37 m	54 m	84 m
C-3A	25 m	30 m	46 m	69 m
C-4A	9 m	15 m	25 m	34 m
C-6A	3 m	3 m	4 m	7 m
C-8A				
B-6A	12 m	15 m	21 m	34 m
B-10A	3 m	3 m	4 m	9 m
B-13A	2 m	2 m	3 m	6 m

*) Don't forget to consider twice the distance to the load (or cable length) when calculating the total wire length (+ and – wire).

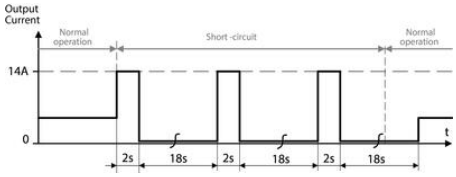

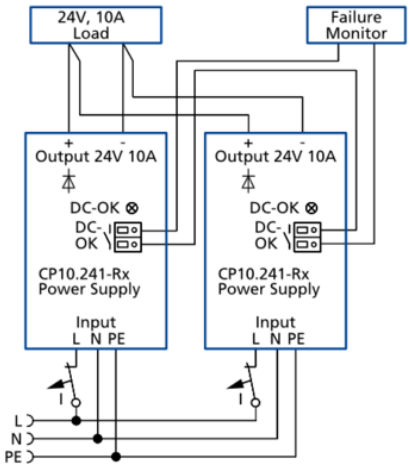
24V, 10A
Load
Failure
Monitor
+ -
Output 24V 10A
DC-OK
DC-
OK
CP10.241-Rx
Power Supply
Input
L N PE
+ -
Output 24V 10A
DC-OK
DC-
OK
CP10.241-Rx
Power Supply
Input
L N PE
L
N
PE

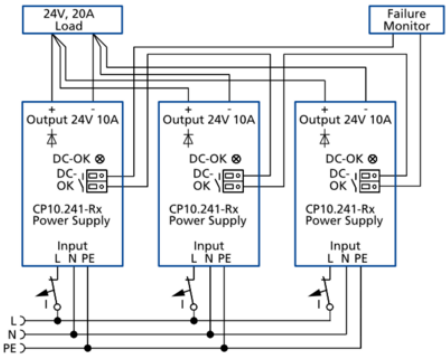
24V, 20A
Load
Failure
Monitor
+ -
Output 24V 10A
DC-OK
DC-
OK
CP10.241-Rx
Power Supply
Input
L N PE
+ -
Output 24V 10A
DC-OK
DC-
OK
CP10.241-Rx
Power Supply
Input
L N PE
+ -
Output 24V 10A
DC-OK
DC-
OK
CP10.241-Rx
Power Supply
Input
L N PE
L
N
PE

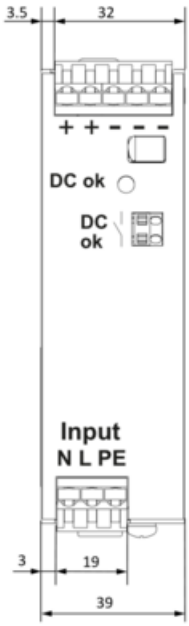
3.5
32
+ + - - -
DC ok
DC
ok
Input
N L PE
3
19
39

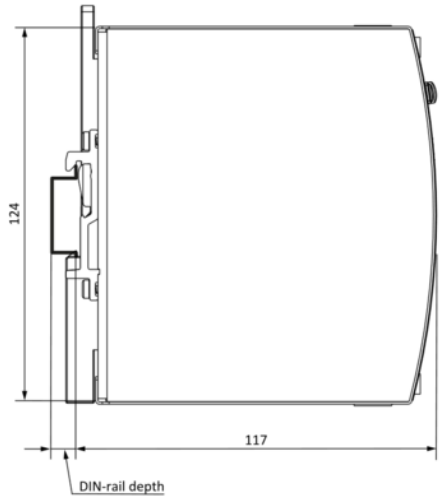
124
117
DIN-rail depth