OEM Automatic Ltd
Address: Whiteacres, Whetstone Leicester, LE8 6ZG
0116 284 9900 | Orders@oem.co.uk | www.oem.co.uk

POWER SUPPLY 1-PHASE, 48 V DC DIMENSION C SERIES, 10A, GENERATION 2

CP20.481
CP20.481



- AC 100-240 V wide-range input
- Width only 48 mm
- Efficiency up to 96.3 %
- Excellent partial load efficiency
- 20 % Output power reserves

PRODUCT DESCRIPTION

TECHNICAL DATA

INPUT DATA

Input voltage ac	100-240 V
Input voltage ac min	85 V AC
Input voltage ac max	264 V AC
Input voltage dc	110-150 V
Input voltage dc min	88 V DC
Input voltage dc max	180 V DC
Inrush current at 120 V ac typical	10 A
Inrush current at 230 V ac typical	45 A
Input voltage range	Wide-range
Power factor at 120 V ac, full load. Typical	99
Power factor at 230 V ac, full load. Typical	98
Number of phases	1

OUTPUT DATA

Output voltage	48 V DC
Output voltage min	48 V DC

Output voltage max	56 V DC
Output current	10 A
Power	480 W

EFFICIENCY / LIFETIME / MTBF

Efficiency at 120 V ac, full load, typical	95 %
Efficiency at 230 V ac, typical	955 %
Efficiency at 230 V ac, full load, typical	963 %
Lifetime at 120 V ac, full load and +40 ° C	66000 h
Lifetime at 230 V ac, full load and +40 ° C	110000 h

DIMENSIONS

Width	48 mm
Height	124 mm
Depth	127 mm
Weight	83 kg

OTHER

Approvals	ATEX, CB, CE, cULus, IECEx
Hold time at 120 V ac, typical full load	32 ms
Hold time at 230 V ac, typical full load	32 ms
IP class	IP20
Clamp type	Screw
Material protection	Aluminium
Supply frequency	50-60 ±6 %
Ripple max	50 mV pp
Series	Dimension C
Power consumption 120 V ac	426 A
Power consumption 230 V ac	223 A
Power drop from +60 °C to + 70 °C	12 W/°C
Temperature min without derating	-25 °C
Temperature max without derating	60 °C

Type Power Supply	AC-DC
Active Transient	Yes
DC relay output	Yes

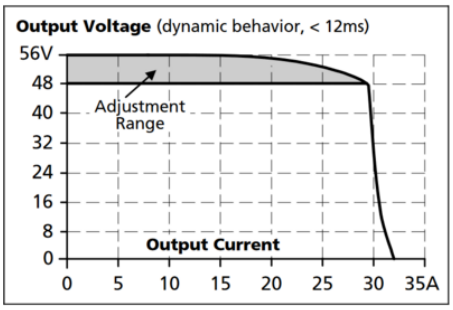

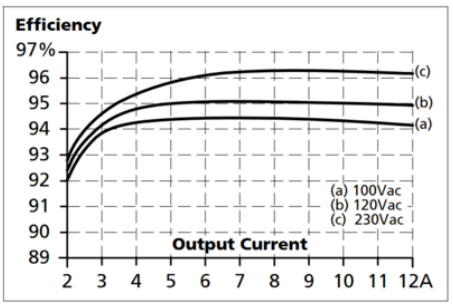

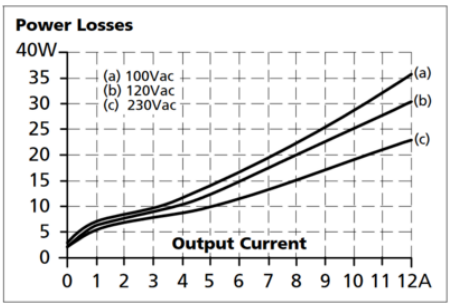

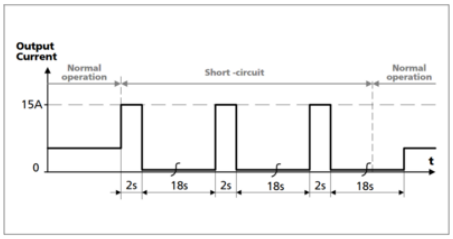

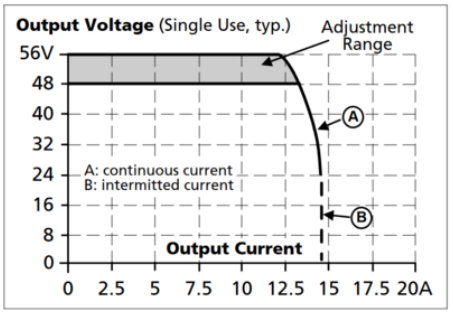

Test results for maximum wire length:

	0.75mm²	1.0mm²	1.5mm²	2.5mm²
C-2A	85 m	117 m	165 m	>200m
C-3A	54 m	85 m	117 m	176 m
C-4A	35 m	48 m	65 m	107 m
C-6A	13 m	19 m	25 m	39 m
C-8A	4 m	7 m	9 m	14 m
C-10A	3 m	6 m	8 m	13 m
C-13A		1 m	1 m	1 m
B-6A	36 m	52 m	75 m	116 m
B-10A	12 m	20 m	25 m	39 m
B-13A	9 m	13 m	17 m	28 m
B-16A	2 m	3 m	5 m	6 m

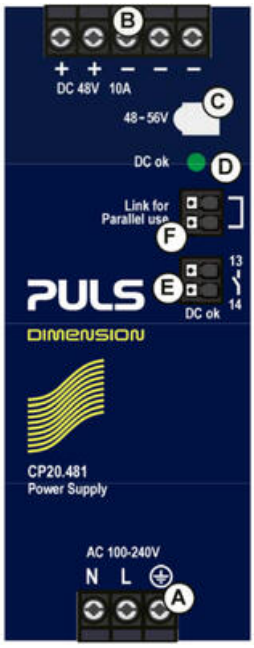

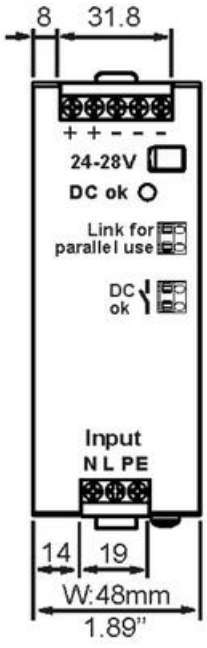

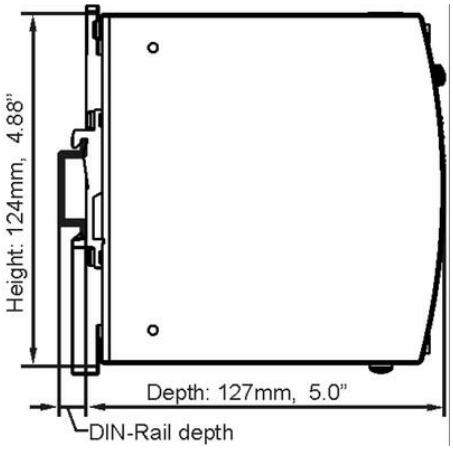

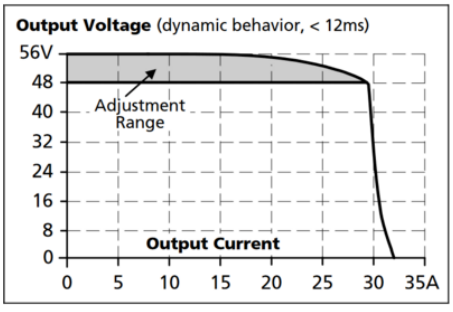

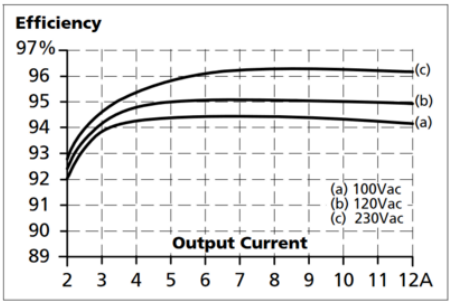

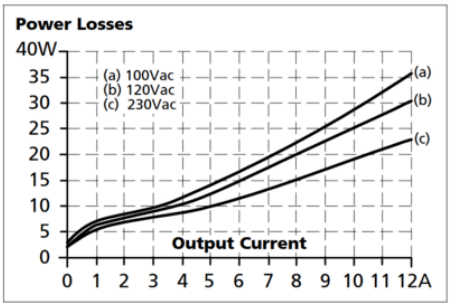

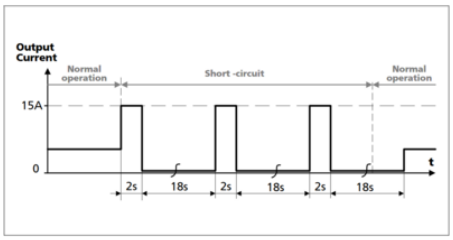

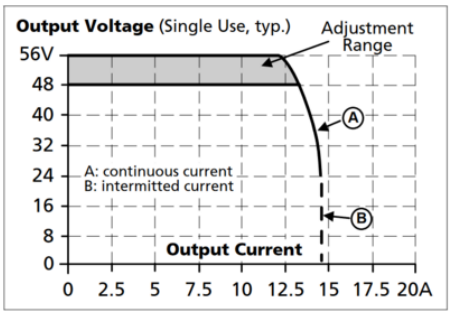

Test results for maximum wire length:

	0.75mm²	1.0mm²	1.5mm²	2.5mm²
C-2A	85 m	117 m	165 m	>200m
C-3A	54 m	85 m	117 m	176 m
C-4A	35 m	48 m	65 m	107 m
C-6A	13 m	19 m	25 m	39 m
C-8A	4 m	7 m	9 m	14 m
C-10A	3 m	6 m	8 m	13 m
C-13A		1 m	1 m	1 m
B-6A	36 m	52 m	75 m	116 m
B-10A	12 m	20 m	25 m	39 m
B-13A	9 m	13 m	17 m	28 m
B-16A	2 m	3 m	5 m	6 m

