OEM Automatic Ltd
Address: Whiteacres, Whetstone Leicester, LE8 6ZG
0116 284 9900 | Orders@oem.co.uk | www.oem.co.uk

REDUNDANT MODULE 20 A DIMENSION SERIES, 12-28VDC

12-28 V DC, 2x10 A

YR20.242
Redundancy Module 2 x 12-28V dc 10A I/P 12-28V dc 20A O/P



- For N+1 and 1+1 Redundant Systems
- MOSFET transistors
- Minimum power loss

PRODUCT DESCRIPTION

The YR20.242 is a redundancy module for building redundant power supply systems. It is equipped with two input channels and one output. The two inputs are decoupled by MOSFET technology.

In addition to the YR20.242, the YR20.246 is available which is featured with an automated load sharing between the connected power supplies and functions which monitor defects in the redundancy circuit or too high output currents, which could prevent redundancy, if one power supply fails.

The YR20.242 utilizes MOSFETs instead of diodes for the decoupling of the two input channels. This reduces the heat generation and the voltage drop between input and output. The redundancy module does not require an additional auxiliary voltage.

Due to the low power losses, the unit is very slender and only requires 32mm width on the DIN-rail. Large connection terminals allow for a safe and fast installation. The large international approval package makes this unit suitable for nearly every application.

TECHNICAL DATA

INPUT DATA

Input voltage dc	12-28 V
Input voltage dc min	8.4 V DC
Input voltage dc max	36.4 V DC
Input current per channel max	20 A
Input current at continuous overload or short circuit max	2x24 A

OUTPUT DATA

Output voltage	24 V DC

Output current	20 A
Output current max	26 A

EFFICIENCY / LIFETIME / MTBF

Life span	355000 h @ 2x 20 A, 24 V DC, 40 °C
MTBF (IEC 61709)	7895000 h @ 2x 20 A, 24 V DC, 40 °C

DIMENSIONS

Width	32 mm
Height	124 mm
Depth	127 mm
Weight	0.25 kg

OTHER

Input / Output Separation	Mosfet
Approvals	ATEX, CB, CE, CSA, CSA US, UL
IP class	IP20
Material protection	Aluminium
Series	Dimension Y
Voltage drop over semiconductor	110 mV
Temperature min without derating	-40 °C
Temperature max without derating	70 °C

Type Power Supply	Redundancy modules

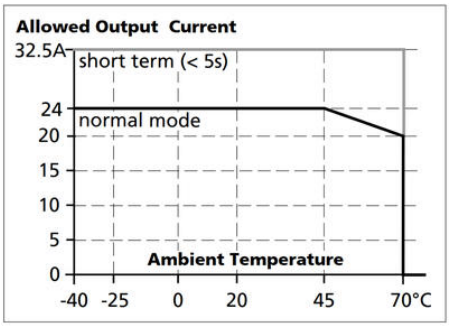

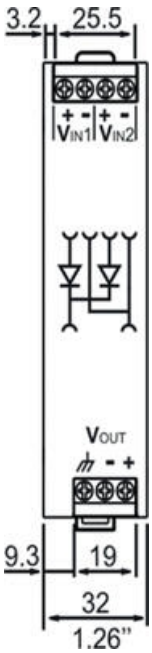

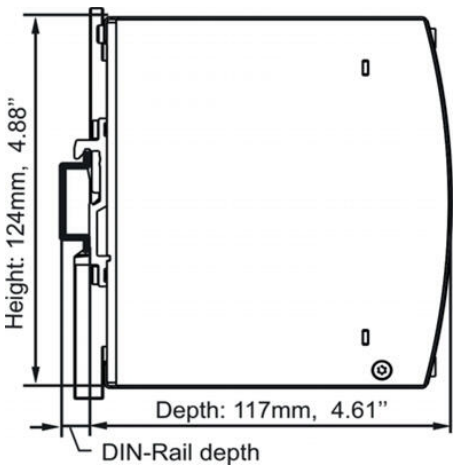

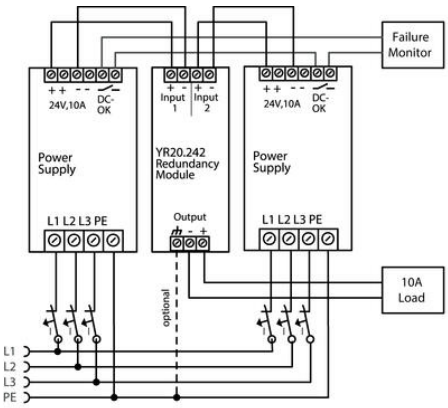
Failure Monitor
24V,10A
DC-OK
Power Supply
Input 1
Input 2
YR20.242 Redundancy Module
Output
L1 L2 L3 PE
optional
10A Load
L1
L2
L3
PE

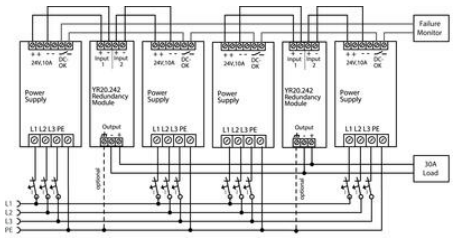
Failure Monitor
30A Load

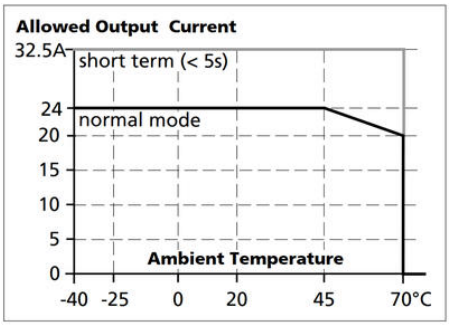
Allowed Output Current
32.5A
short term (< 5s)
24
normal mode
20
15
10
5
0
Ambient Temperature
-40
-25
0
20
45
70°C

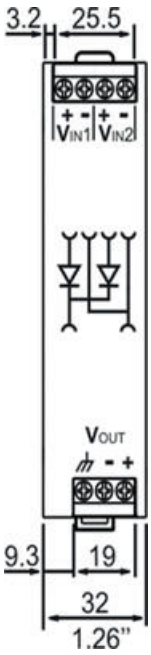
3.2
25.5
VIN1
VIN2
VOUT
9.3
19
32
1.26”

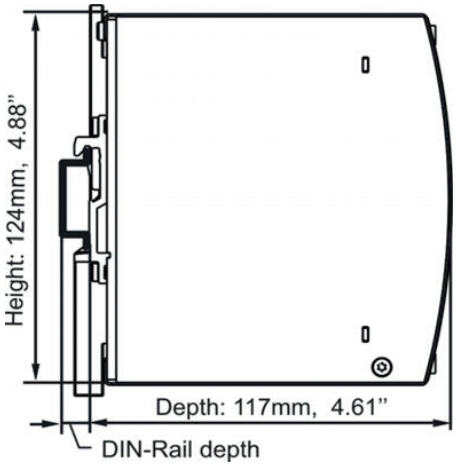
Height: 124mm, 4.88”
Depth: 117mm, 4.61”
DIN-Rail depth

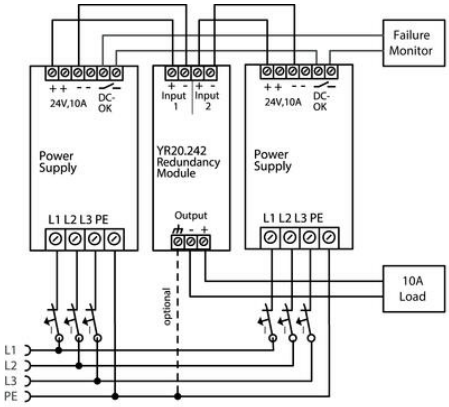
Failure Monitor
24V,10A
DC-OK
Power Supply
Input 1
Input 2
YR20.242 Redundancy Module
Output
L1 L2 L3 PE
optional
10A Load
L1
L2
L3
PE

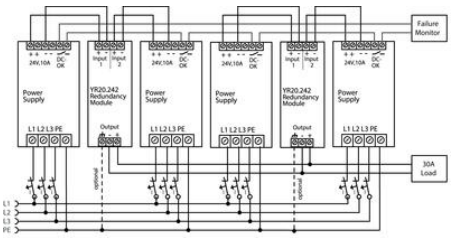
Failure Monitor
30A Load