OEM Automatic Ltd
Address: Whiteacres, Whetstone Leicester, LE8 6ZG
0116 284 9900 | Orders@oem.co.uk | www.oem.co.uk

REDUNDANT MODULE 20 A DIMENSION SERIES, 24-28 VDC

24-28 V DC, 2x10 A

YR20.246
Redundancy Module 2 x 24-28V dc 10A I/P 24-28V dc 20A O/P



- For 1+1 Redundancy
- MOSFET transistors
- Minimum power loss
- Automated Load Sharing

PRODUCT DESCRIPTION

The YR20.246 is a redundancy module for building redundant power supply systems. It is equipped with two input channels and one output. The two inputs are decoupled by MOSFET technology.

The device is equipped with an automated load sharing feature, which can compensate a small voltage imbalance between the power supplies connected to the inputs in order to achieve an even current share. It also monitors the function of the redundancy circuitry and provides a signal in case of a failure or a high output current, which could prevent redundancy if one power supply fails. If this feature is not required the YR20.242 is available.

The redundancy utilizes MOSFETs instead of diodes for the decoupling of the two input channels. This reduces the heat generation and the voltage drop between input and output. The redundancy module does not require an additional auxiliary voltage.

Due to the low power losses, the unit is very slender and only requires 32mm width on the DIN-rail. Large connection terminals allow for a safe and fast installation. The large international approval package makes this unit suitable for nearly every application.

TECHNICAL DATA

INPUT DATA

Input voltage dc	24-28 V
Input voltage dc min	18 V DC
Input voltage dc max	35 V DC
Input current per channel max	12 A
Input current at continuous overload or short circuit max	24 A

OUTPUT DATA

Output voltage	24 V DC
Output current	20 A
Output current max	26 A

EFFICIENCY / LIFETIME / MTBF

Life span	182000 h @ 2x 20 A, 24 V DC, 40 °C
MTBF (IEC 61709)	1954000 h @ 2x 20 A, 24 V DC, 40 °C

DIMENSIONS

Width	32 mm
Height	124 mm
Depth	127 mm
Weight	0.31 kg

OTHER

Input / Output Separation	Mosfet
Approvals	ATEX, CB, CE, CSA, CSA US, UL
IP class	IP20
Material protection	Aluminium
Series	Dimension Y
Voltage drop over semiconductor	500 mV
Temperature min without derating	-40 °C
Temperature max without derating	70 °C

Type Power Supply	Redundancy modules

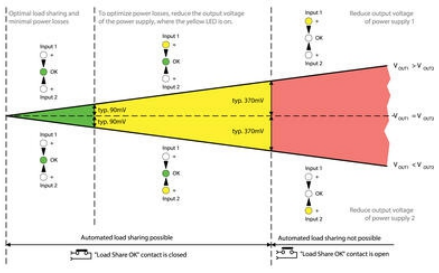

Fig. 13-1 Output current vs. ambient temp.

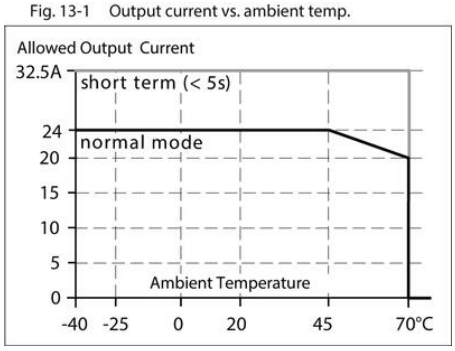

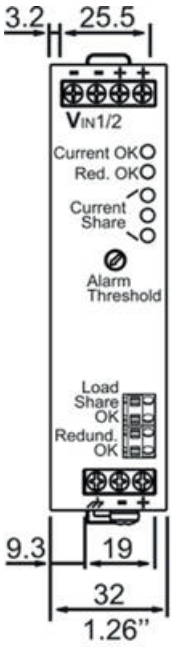

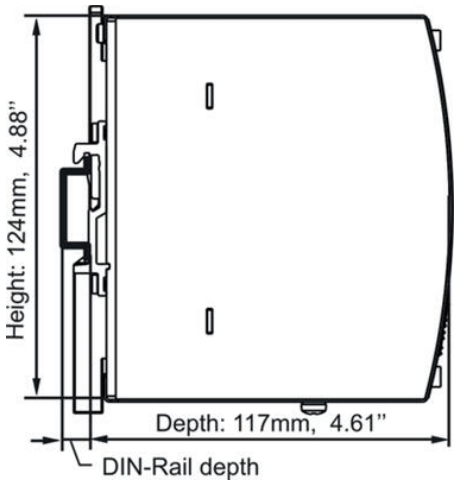

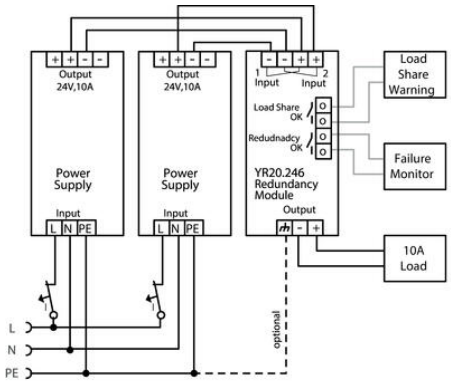

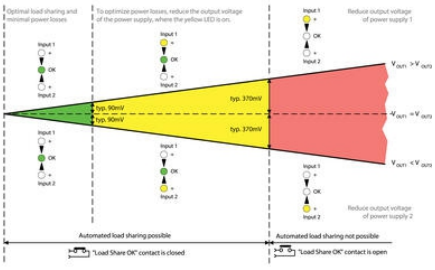

Fig. 13-1 Output current vs. ambient temp.

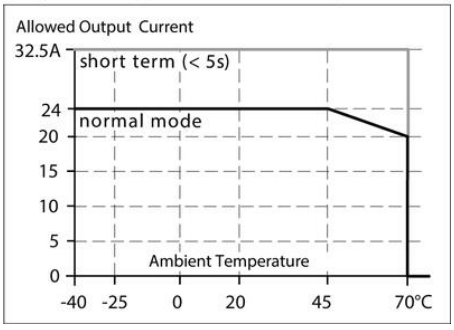

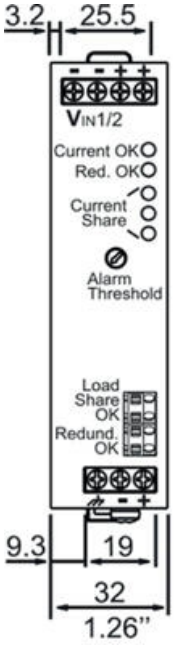

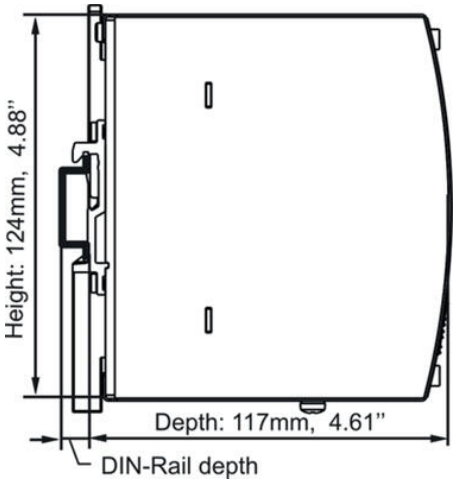

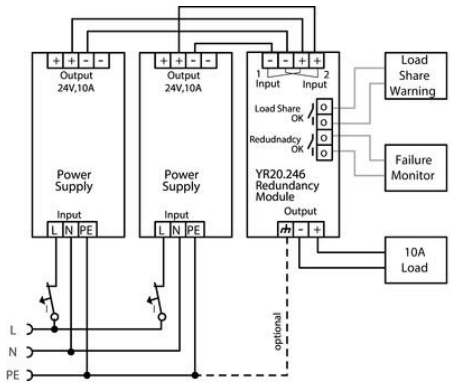
Output
24V,10A
Power
Supply
Input
L N PE
Output
24V,10A
Power
Supply
Input
L N PE
Input
Input
1
2
Load Share
OK
Redudnadcy
OK
YR20.246
Redundancy
Module
Output
Load
Share
Warning
Failure
Monitor
10A
Load
L
N
PE
optional