OEM Automatic Ltd
Address: Whiteacres, Whetstone Leicester, LE8 6ZG
0116 284 9900 | Orders@oem.co.uk | www.oem.co.uk

REDUNDANT MODULES 40 AND 80 A DIMENSION SERIES

YR40.241
Redundancy Module 2 x 12-28V dc 20A I/P 12-48V dc 40A O/P

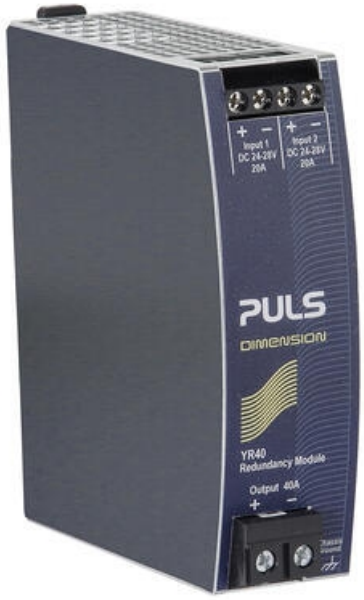

- 40 and 80 A
- MOSFET transistors
- Minimum power loss
- Compact dimensions

PRODUCT DESCRIPTION

Redundant modules have MOSFET transistors instead of diodes, resulting in lower heat dissipation and voltage drop. Thanks to the MOSFET technology, the modules can be made very compact.
Redundant modules have two separate entrances, each of which can be loaded with half the output current instance. 40 A module can handle up to 20 A per input.
With redundant modules from Pulse, you get a secure system against internal power supply faults which are particularly suitable in processes where downtime is costly.
Redundant module can also be used in systems where you want to ensure the operation of sensitive loads. Input 1 is connected to the main power supply that normally supplies loads directly and eg PLC via redundant module output. Input 2 is connected to a smaller unit that is only connected to the sensitive load via the output, in this case the PLC. In case of failure of the main unit or short circuit at the loads going PLC supplied by the smaller unit and avoids incorrect processavslut. Redundant module is also suitable when you want to separate the power supply units from the loads to avoid returned voltage, for example, from motors and batteries.

TECHNICAL DATA

INPUT DATA

Input voltage dc	12-28 V
Input voltage dc min	8.4 V DC
Input voltage dc max	36.4 V DC
Input current per channel max	20 A
Input current at continuous overload or short circuit max	2x32,5 A

OUTPUT DATA

Output voltage	24 V DC

Output current	40 A
Output current max	65 A

EFFICIENCY / LIFETIME / MTBF

Life span	246000 h @ 2x 20 A, 24 V DC, 40 °C
MTBF (IEC 61709)	2706000 h @ 2x 20 A, 24 V DC, 40 °C

DIMENSIONS

Width	36 mm
Height	124 mm
Depth	127 mm
Weight	0.34 kg

OTHER

Input / Output Separation	Mosfet
Approvals	ABS, ATEX, CB, CE, CSA, CSA US, GL, IECEx, UL
IP class	IP20
Material protection	Aluminium
Series	Dimension Y
Voltage drop over semiconductor	140 mV
Temperature min without derating	-40 °C
Temperature max without derating	70 °C

Type Power Supply	Redundancy modules

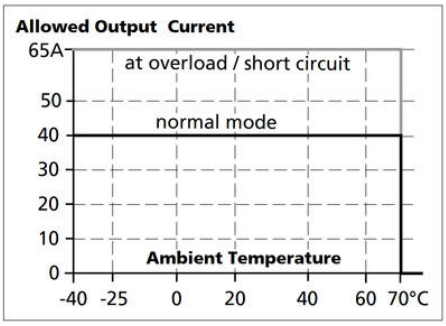

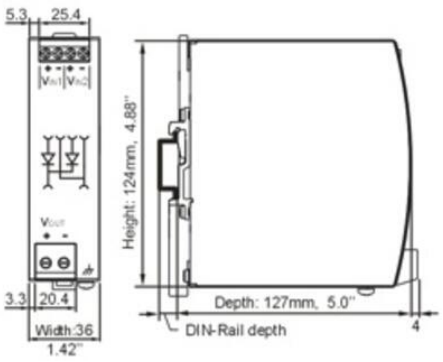

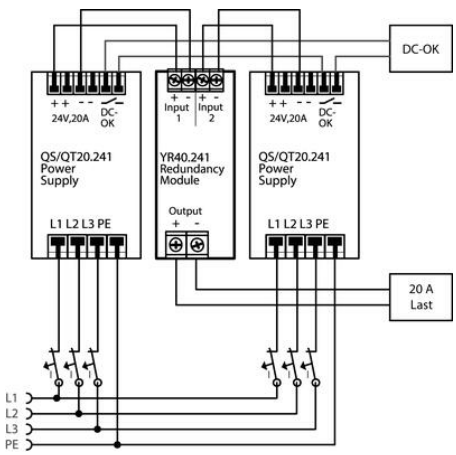

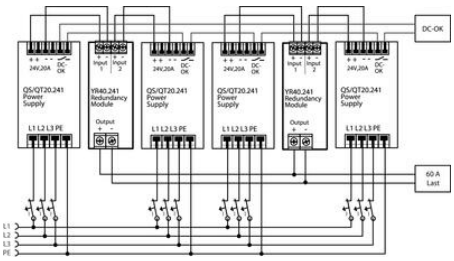
DC-OK
24V,20A
DC OK
QS/QT20.241
Power Supply
L1 L2 L3 PE
YR40.241
Redundancy Module
Input 1
Input 2
Output
60 A Last
L1
L2
L3
PE