OEM Automatic Ltd
Address: Whiteacres, Whetstone Leicester, LE8 6ZG
0116 284 9900 | Orders@oem.co.uk | www.oem.co.uk

BUFFER MODULE, 24 V DC WITH SUPER CAPACITORS, EDLC

UC10.241
DC UPS 24V dc I/P 24V dc 15A O/P 6kWs



- Load current 15 A
- 6 kWs to 12 kWs
- Long buffer times
- Maintenance
- Long life

PRODUCT DESCRIPTION

The buffer module is connected via 24 V dc unit. The capacitor bank consists of so-called supercapacitors EDLC (Electrochemical Double Layer Capacitors), which has a very large storage capacity compared with the electrolyte. Pulse novel buffer module is an active circuit which ensures that the capacitors will not be charged with high voltage which gives a very long life.
It requires no maintenance as compared to a DC UPS where the batteries must be replaced at regular intervals. The temperature range of -40 to +60°C with the longevity do Buffer modules are suitable in a variety of applications, especially suitable where service and maintenance is costly. If 24 V dc voltage is lost or temporarily falls below 22.5 V dc buffer connected device automatically and bridge the shortfall without any temporary dips. Data can be saved and machines can be shut down in a safe and controlled manner. As soon as the 24 V dc power is restored starting capacitors to charge. The tension is constant 22.25 V dc during the entire buffer period, the voltage drops are not at the end of discharge, thus ensuring that the connected loads do not fall off.
Relay outputs provide signals on the following status:
Ready: The relay closes when the capacitors are fully charged, the input voltage is 24 V dc level.
Buffering: The relay closes when the capacitors are discharged, voltage interruption.
In addition there is an input, **Inhibit** enabling shutdown of the buffer function using a 24 V dc signal.

Buffer times

Buffering
A=UC10.241 6kWs. B=UC10.242 12 kWs

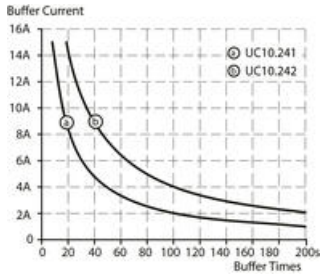

Load current	UC10.241 6kWs	UC10.242 12 kWs
0.5 A	340 s	680 s
1 A	200 s	400 s
3 A	68 s	136 s
5 A	39 s	78 s
7 A	26 s	53 s
10 A	16.5 s	33 s
15 A	9 s	18 s

TECHNICAL DATA

INPUT DATA

Input voltage from the unit	24 V DC
Input voltage for battery connection	22.8 V DC
Input current during charging	1.3 A

OUTPUT DATA

Output current in buffer mode max	15 A
Output current at 24 V dc	15 A
Output voltage normal operation	24 V DC
Output voltage at buffering	22.45 V DC
Output current during operation max	15 A

EFFICIENCY / LIFETIME / MTBF

Efficiency	97.8 %

Life span	96 000 h @ 15 A, 40 °C, 75%
MTBF (IEC 61709)	854 000 h @ 15 A, 40 °C

DIMENSIONS

Width	126 mm
Height	124 mm
Depth	117 mm
Weight	1.15 kg

OTHER

Approvals	CB, CE, CSA, CSA US, EX, IECEx, UL
IP class	IP20
Charging the battery type	1.1 A
Material protection	Aluminium
Ripple max	30 mV pp
Voltage level for activating the buffer module	22.45 V DC
Temperature min without derating	-40 °C
Temperature max without derating	60 °C

Type Power Supply	Buffer Module

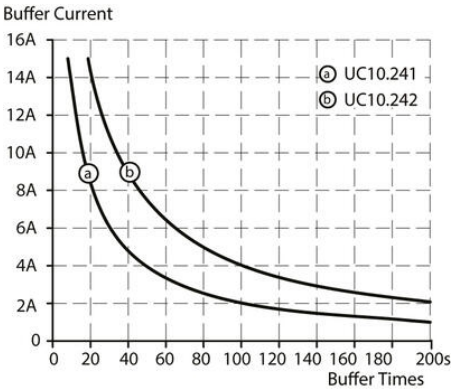

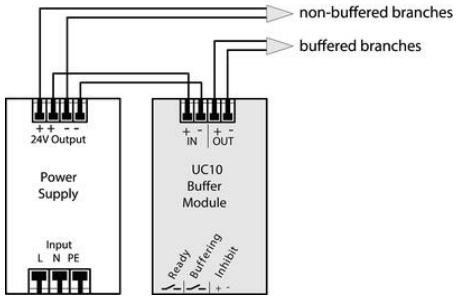

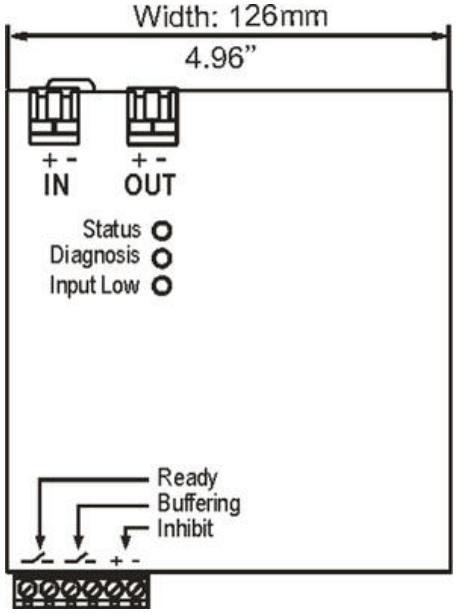

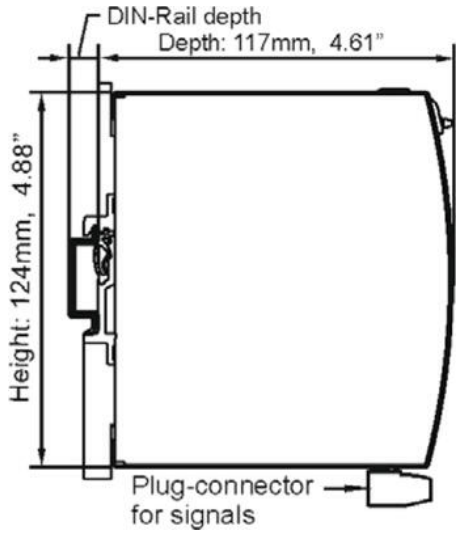
DIN-Rail depth
Depth: 117mm, 4.61”
Height: 124mm, 4.88”
Plug-connector
for signals