OEM Automatic Ltd
Address: Whiteacres, Whetstone Leicester, LE8 6ZG
0116 284 9900 | Orders@oem.co.uk | www.oem.co.uk

POWER SUPPLY 3-PHASE, 48 V DC DIMENSION C SERIES

CT10.481
PSU 3PH 380-480V ac I/P 48V dc 5A 240W O/P



- Output current of 5 A
- Up to 92.8% efficiency
- Integrated primary fuses
- High reliability

PRODUCT DESCRIPTION

Puls Dimension C is a series of very high quality, reliability and performance.
CT10 has built primary fuses that make it possible to connect the unit without the need for intermediate fuses up to 32 A (UL) which saves space and money.
The efficiency is high over a wide load range, which results in reduced power consumption and longer life regardless of load current. An average efficiency of 50% to 100% load is 92% with a peak value of 92.8%.
The short circuit current is 3 x rated current for 20 ms, which helps secondary fuses. Power boost of 20% enables higher current extraction without voltage drops. This is especially useful during start-ups and to bridge the current peaks in the application. Power can be used continually up to +45°C and short periods from +45°C to +60°C.
Active transient ensure operation also in very interference rich electrical environment in addition, CT10 active inrush current protection, which means a very low starting current, even if the unit has been in operation for a longer time. Especially useful for redundant/parallel-connected systems.
Power supply connected with 3 stages but can operate on only two phases, taking into account the loading and ambient temperature.

We recommend free space of 40 mm above and 20 mm below the unit, and 5 mm on the sides.

Power reserve

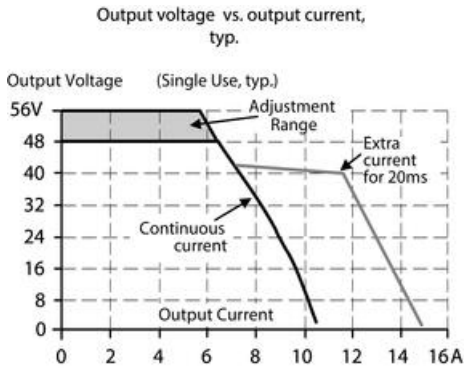

TECHNICAL DATA

INPUT DATA

Input voltage ac	380-480 V
Input voltage ac min	323 V AC
Input voltage ac max	576 V AC
Input voltage dc min	450 V DC
Input voltage dc max	780 V DC
Inrush current at 400 V ac typical	4 A
Input voltage range	Wide-range
Power factor at 400 V ac, full load. Typical	0.53
Number of phases	3

OUTPUT DATA

Output voltage	48 V DC
Output voltage min	48 V DC
Output voltage max	56 V DC
Output current	5 A
Power	240 W

EFFICIENCY / LIFETIME / MTBF

Efficiency at 400 V ac, typical	92 %
Efficiency at 400 V ac, full load, typical	92.8 %
Lifetime at 400 V ac, full load and +40 ° C	122000 h
MTBF (IEC 61709) 400 V ac, max loan, +40 °C	1051000 h

DIMENSIONS

Width	62 mm
Height	124 mm
Depth	117 mm
Weight	0.75 kg

OTHER

Approvals	ABS, CB, CE, CSA US, cRUus, cULus, GL
Hold time at 400 V ac, typical full load	34 ms
IP class	IP20
Clamp type	Screw
Material protection	Aluminium
Supply frequency	50-60 ±6 %

Ripple max	50 mV pp
Series	Dimension C
Power consumption at 400 V ac	0.7 A
Power drop from +60 °C to + 70 °C	6 W/°C
Temperature min without derating	-25 °C
Temperature max without derating	60 °C

Type Power Supply	AC-DC
Active Transient	Yes

Output voltage vs. output current, typ.

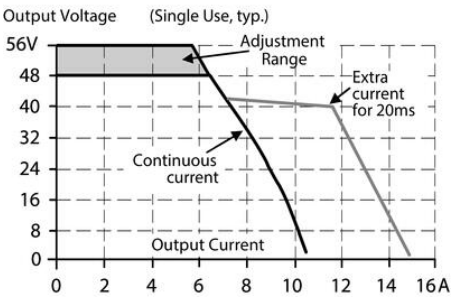

Fig. 14-1 **Output current vs. ambient temp.**

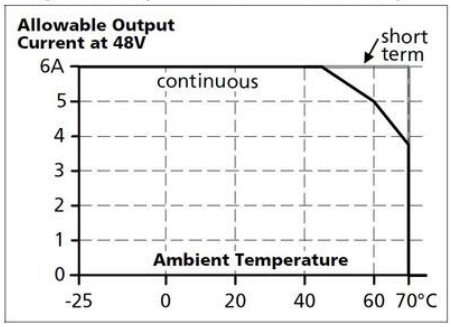

Fig. 8-1 **Efficiency vs. output current at 48V, typ., 3-phase operation**

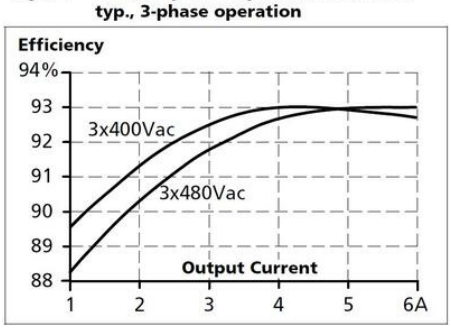

Fig. 8-2 **Losses vs. output current at 48V, typ., 3-phase operation**

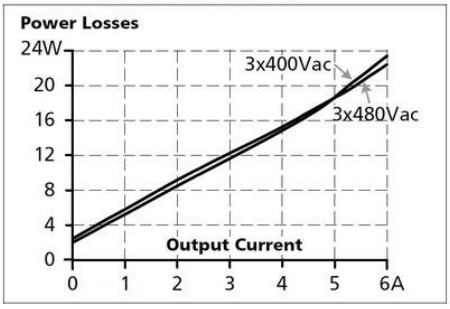

Maximal wire length for a magnetic (fast) tripping *):

	0.75mm²	1.0mm²	1.5mm²	2.5mm²
C-2A	52m	70m	94m	148m
C-3A	33m	42m	64m	97m
C-4A	19m	23m	33m	48m
C-6A	8m	9m	13m	22m
C-8A	-	-	-	-
C-10A	-	-	-	-
B-6A	18m	22m	33m	46m
B-10A	4m	5m	10m	13m

Fig. 10-1 **Front side**



Fig. 20-1 **Front view**

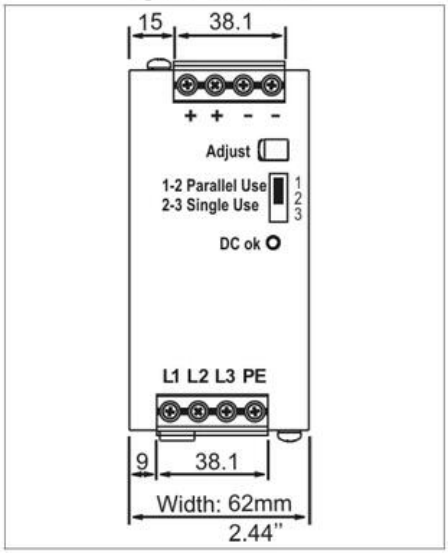

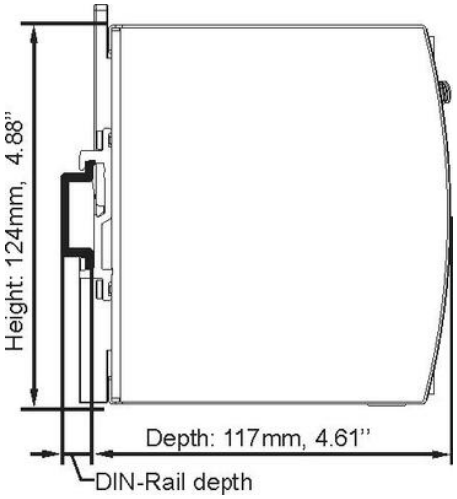

Output voltage vs. output current, typ.

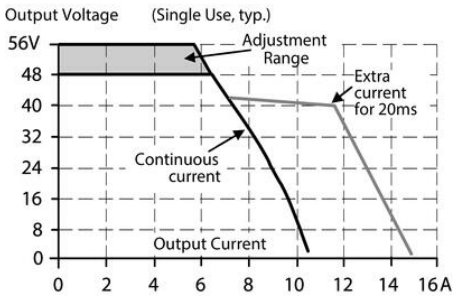

Fig. 14-1 **Output current vs. ambient temp.**

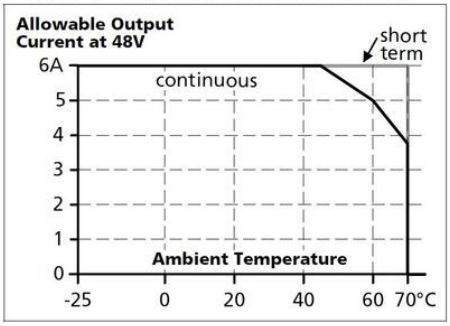

Fig. 8-1 **Efficiency vs. output current at 48V, typ., 3-phase operation**

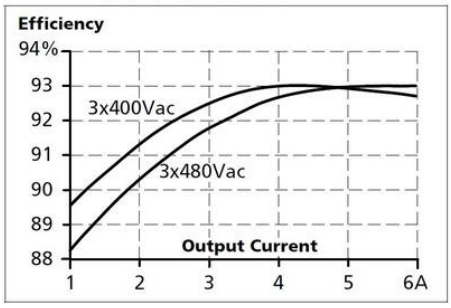

Fig. 8-2 **Losses vs. output current at 48V, typ., 3-phase operation**

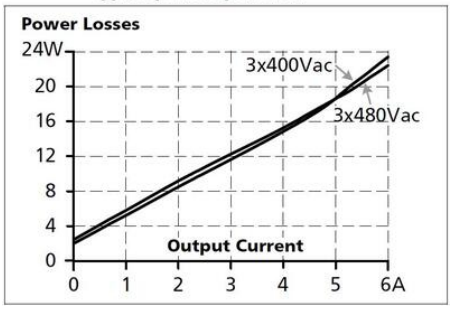

Maximal wire length for a magnetic (fast) tripping *):

	0.75mm²	1.0mm²	1.5mm²	2.5mm²
C-2A	52m	70m	94m	148m
C-3A	33m	42m	64m	97m
C-4A	19m	23m	33m	48m
C-6A	8m	9m	13m	22m
C-8A	-	-	-	-
C-10A	-	-	-	-
B-6A	18m	22m	33m	46m
B-10A	4m	5m	10m	13m

Fig. 10-1 **Front side**



Fig. 20-1 **Front view**

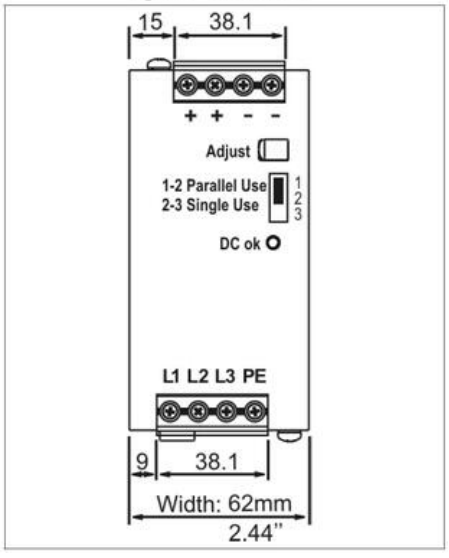

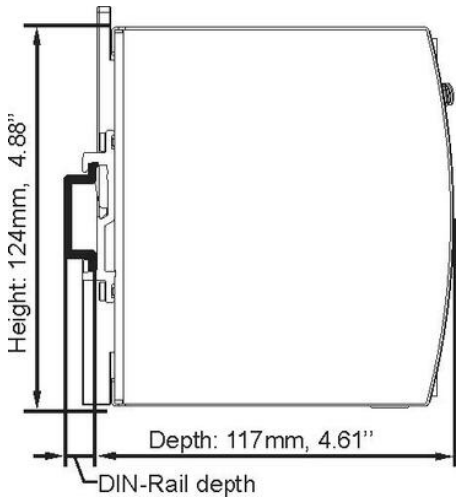
Height: 124mm, 4.88''
Depth: 117mm, 4.61''
DIN-Rail depth