OEM Automatic Ltd
Address: Whiteacres, Whetstone Leicester, LE8 6ZG
0116 284 9900 | Orders@oem.co.uk | www.oem.co.uk

BUSBAR SERIES, LCTB 140

LCTB 14010H0200A51
Current transformer, busbar conductor



- 0.2S, 0.2, 0.5s, 0.5, 1 Accuracy classes
- 200>5000A Primary current
- 1A/5A Secondary current
- Ø72 or Ø86mm Hole diameter

PRODUCT DESCRIPTION

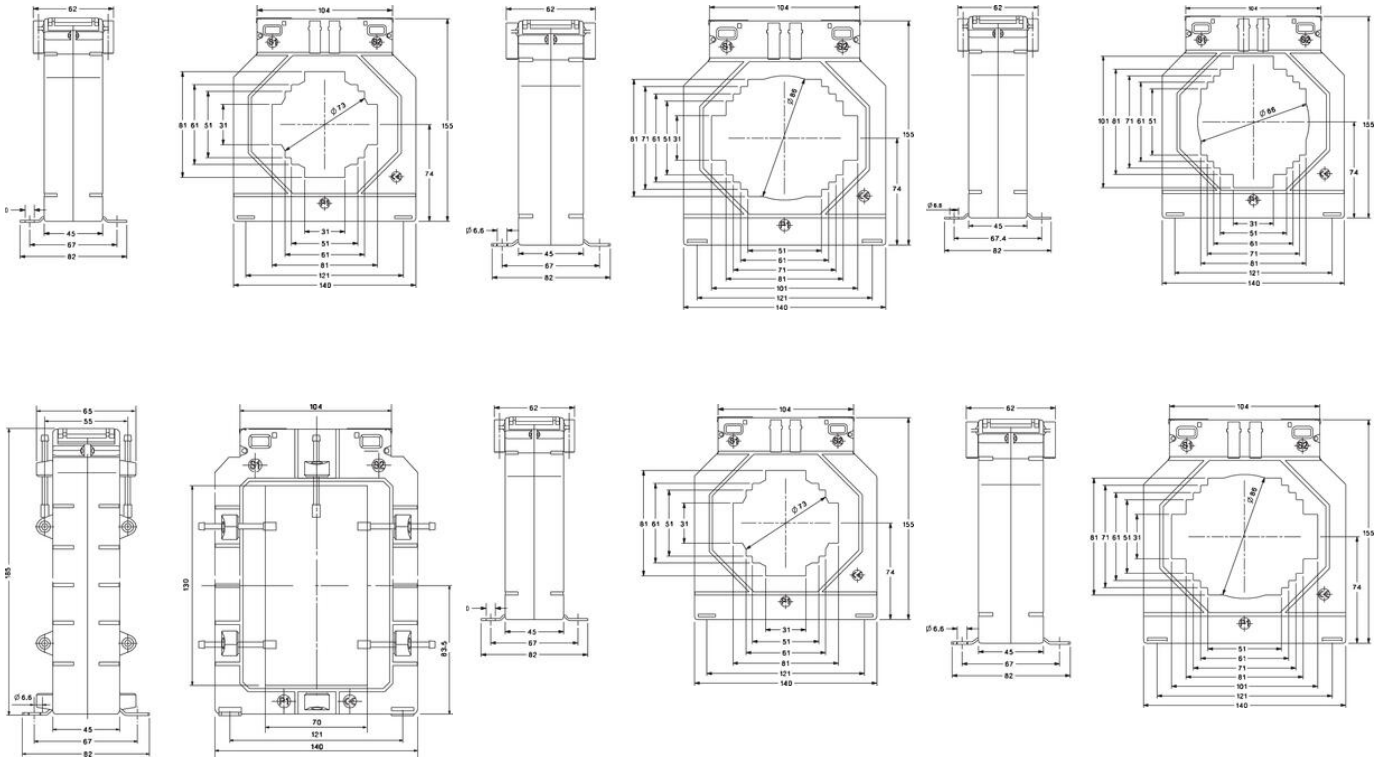

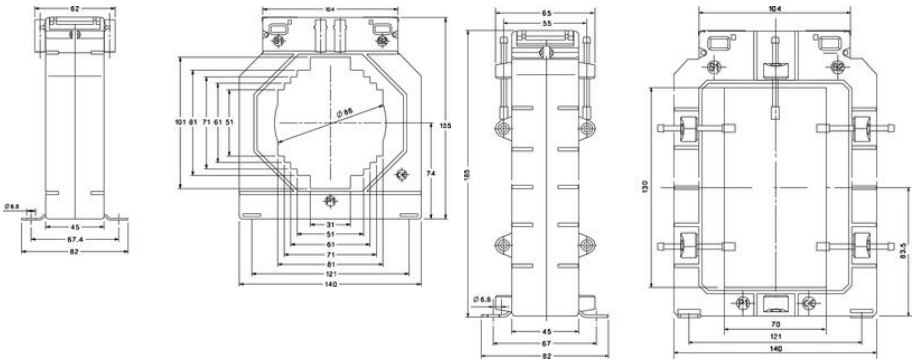
62
Ø6.6
45
67.4
82
104
101 81 71 61 51
Ø66
155
74
31
51
61
71
81
121
140
65
55
185
Ø6.6
45
67
82
104
130
83.5
70
121
140