**OEM Automatic Ltd**
Address: Whiteacres, Whetstone Leicester, LE8 6ZG
0116 284 9900 | Orders@oem.co.uk | www.oem.co.uk

# BUSBAR SERIES, LCTB 104

LCTB-104/80-2000A

- 0.2S, 0.2, 0.5, 1 Accuracy classes
- 400>800A Primary current
- 1A/5A Secondary current
- Ø54 or Ø65mm Hole diameter
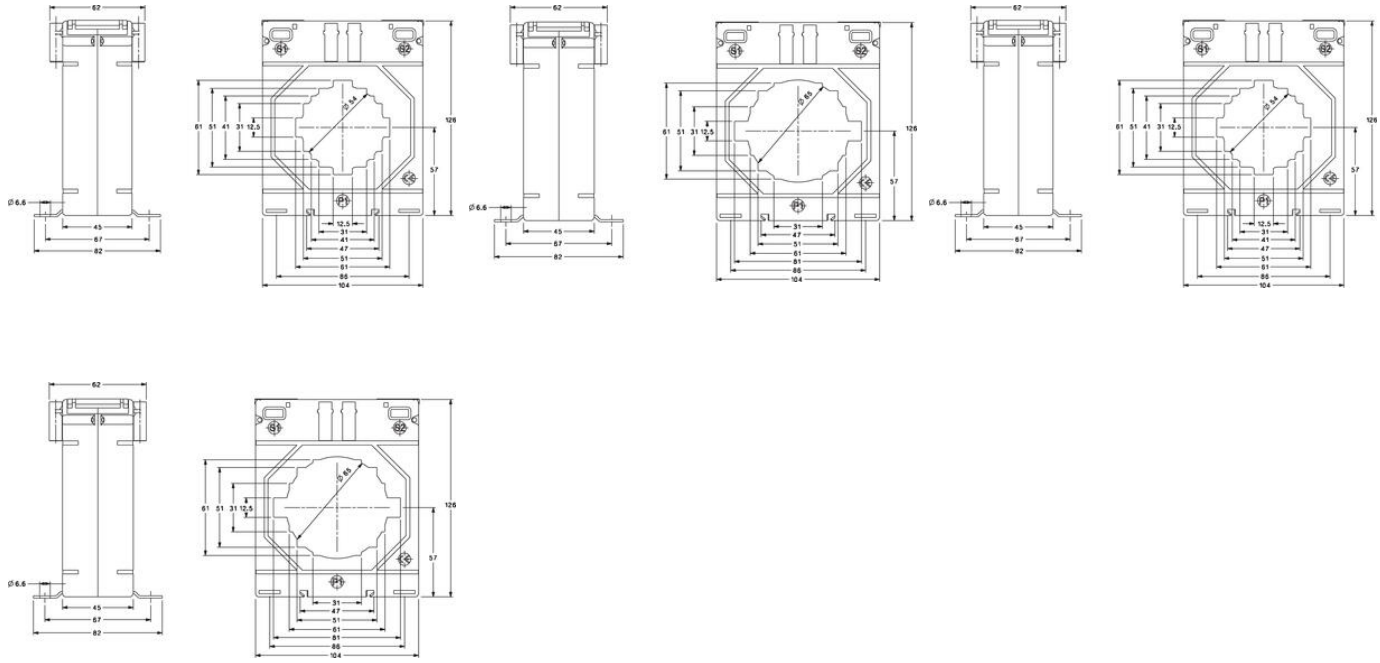
## PRODUCT DESCRIPTION