OEM Automatic Ltd
Address: Whiteacres, Whetstone Leicester, LE8 6ZG
0116 284 9900 | Orders@oem.co.uk | www.oem.co.uk

KUEBLER - SLOPE SENSOR IN81

SERIE 8.IN81

- 1- & 2-dimensional
- Analogue output
- High IP class
- Wide temperature range



PRODUCT DESCRIPTION

The IN81 series has analogue outputs, and is available with the following outputs:
4 ... 20 mA
0.1 ... 4.9V
0.5 ... 4.5V
0 ... 5V
0 ... 10 V

The aluminum house makes redundant solutions possible through a stackable design. The sensor is available for both 1-dimensional and 2-dimensional measurement.
In 1-dimensional design, the IN81 measures up to 360 °.
The IN81 is available with filters ranging from 0.1 up to 10Hz.
For increased security there is the possibility of built-in limit switches.
The high IP rating and extended temperature range make it ideally suited to mobile applications, for example. crane trucks, timber trucks and forestry machines.

Contact us for more variations on the IN81.

Please refer to the image below for ordering information.

Order code 8.IN81 . X X X X . X 2 X
Type — a b c d — e f g

a *Measuring direction*
1 = 1-dimensional
2 = 2-dimensional

b *Measuring range*
1 = ±10° [1]
2 = ±15° [1]
3 = ±30° [1]
4 = ±45° [1]
5 = ±60° [1]
6 = ±85° [1]
7 = 0 ... 360° (±180°) [2]
8 = 0 ... 180° (±90°) [2]

c *Interface*
1 = 4 ... 20 mA / 12 bit
2 = 0.1 ... 4.9 V / 12 bit
3 = 0.5 ... 4.5 V / 12 bit
4 = 0 ... 5 V / 12 bit
5 = 0 ... 10 V / 12 bit

d *Filter*
1 = no filter
2 = filter value 0.1 Hz
3 = filter value 0.3 Hz
4 = filter value 0.5 Hz
5 = filter value 1.0 Hz
6 = filter value 2.0 Hz
7 = filter value 5.0 Hz
8 = filter value 10.0 Hz

e *Optional switching outputs*
1 = none
2 = 2 switch outputs [3]

f *Power supply*
2 = 10 ... 30V / 40 mA
15 ... 30 V for interface 5

g *Type of connection*
1 = 1 x M12 connector, 8-pin
3 = 2 x M12 connector, 8-pin + 5-pin [4]

;

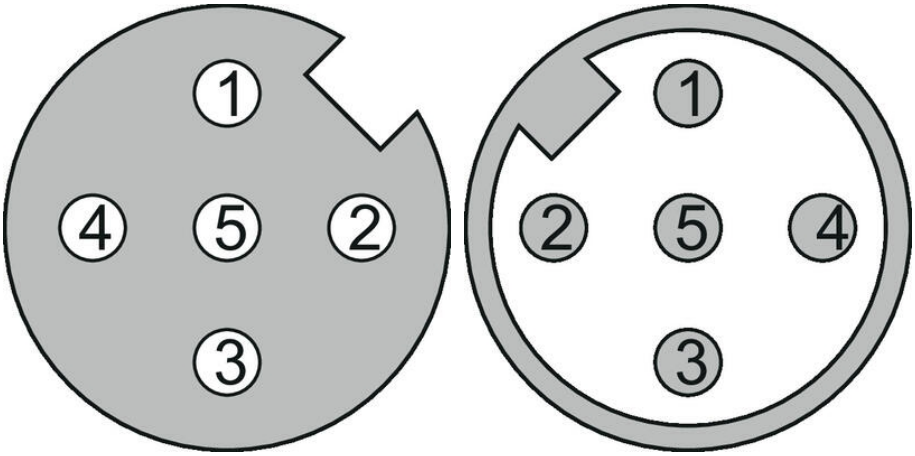
1
4
5
2
3
1
2
5
4
3

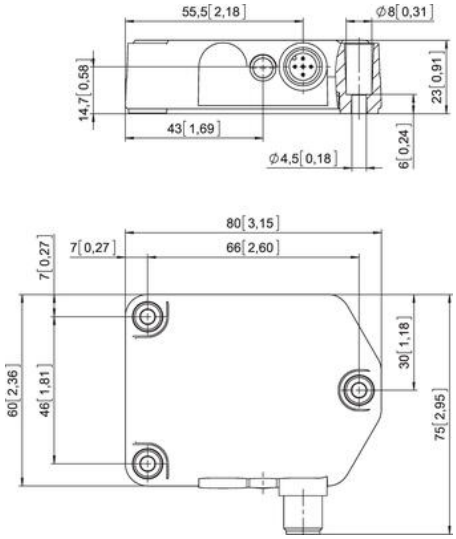
55,5[2,18]
Ø8[0,31]
14,7[0,58]
23[0,91]
43[1,69]
6[0,24]
Ø4,5[0,18]
80[3,15]
7[0,27]
66[2,60]
7[0,27]
30[1,18]
60[2,36]
46[1,81]
75[2,95]

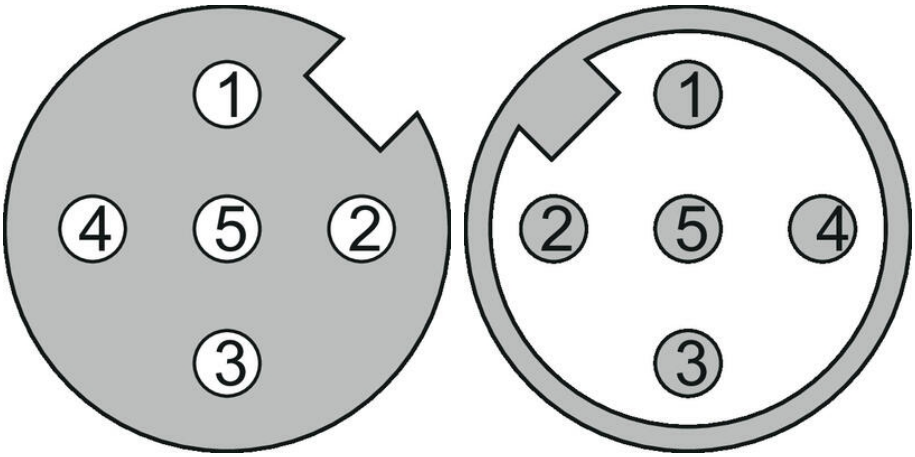
1
4
5
2
3
1
2
5
4
3

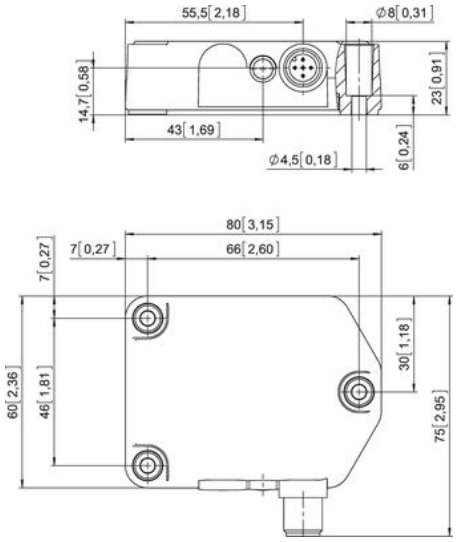
55,5[2,18]
Ø8[0,31]
14,7[0,58]
23[0,91]
43[1,69]
6[0,24]
Ø4,5[0,18]
80[3,15]
7[0,27]
66[2,60]
7[0,27]
30[1,18]
60[2,36]
46[1,81]
75[2,95]