OEM AUTOMATIC
OEM Automatic Ltd
Address: Whiteacres, Whetstone Leicester, LE8 6ZG
0116 284 9900 | Orders@oem.co.uk | www.oem.co.uk

KUEBLER - TILT SENSOR IN88

SERIE 8.IN88



- 1- & 2-dimensional
- signal filters
- High IP class
- CANopen & Modbus

PRODUCT DESCRIPTION

Please refer to the images below for ordering information.

Order code 8.IN88 . X X 2 1 . 1 2 X
Type a b c d e

a Measuring direction	b Measuring range	c Interface	d Power supply	e Type of connection
1 = 1-dimensional	6 = ±85° 1)	2 = CANopen	2 = 10 ... 30 V DC	1 = 1 x M12 connector, 5-pin
2 = 2-dimensional	7 = 0° ... 360° 2)			3 = 2 x M12 connector, 5-pin

Order code 8.IN88 . X X 6 1 . 1 2 X
Type a b c d e

a Measuring direction	b Measuring range	c Interface	d Power supply	e Type of connection
1 = 1-dimensional	6 = ±85° 1)	6 = Modbus RTU	2 = 10 ... 30 V DC	1 = 1 x M12 connector, 5-pin
2 = 2-dimensional	7 = 0° ... 360° 2)			3 = 2 x M12 connector, 5-pin

;

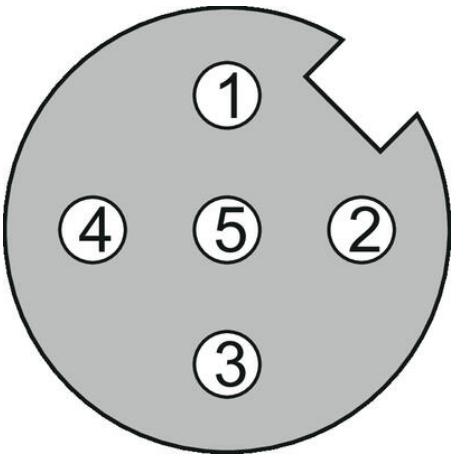
1
4
5
2
3

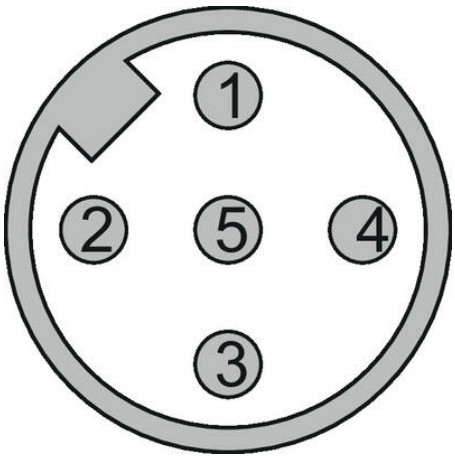
1
2
5
4
3

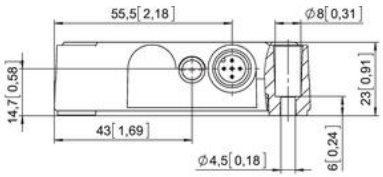
55,5[2,18]
⌀8[0,31]
14,7[0,58]
23[0,91]
43[1,69]
6[0,24]
⌀4,5[0,18]

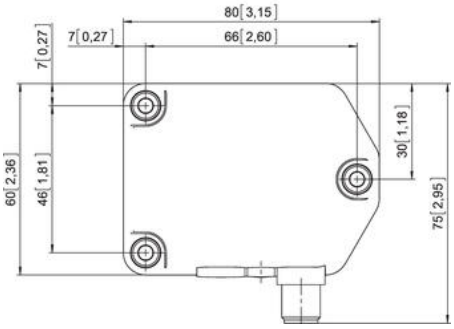
80[3,15]
7[0,27]
7[0,27]
66[2,60]
30[1,18]
60[2,36]
46[1,81]
75[2,95]

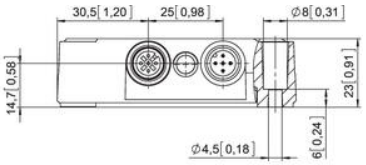
30,5[1,20]
25[0,98]
⌀8[0,31]
14,7[0,58]
23[0,91]
⌀4,5[0,18]
6[0,24]

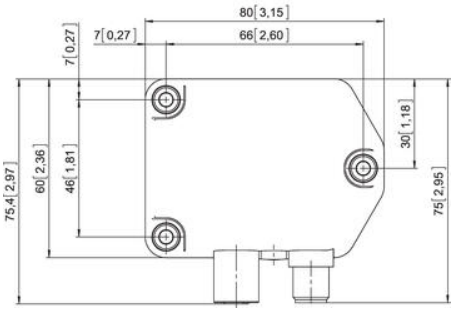
80[3,15]
7[0,27]
7[0,27]
66[2,60]
30[1,18]
75,4[2,97]
60[2,36]
46[1,81]
75[2,95]

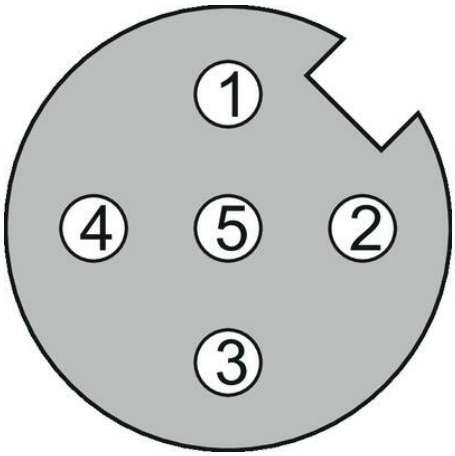
1
4
5
2
3

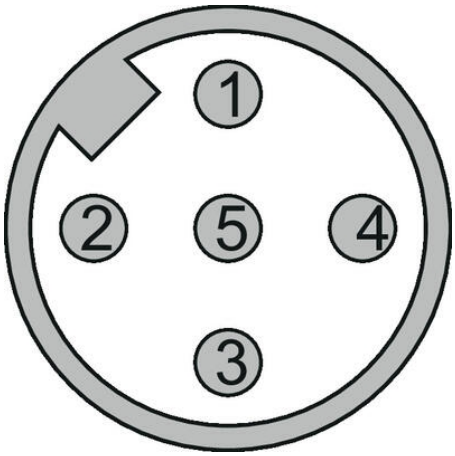
1
2
5
4
3

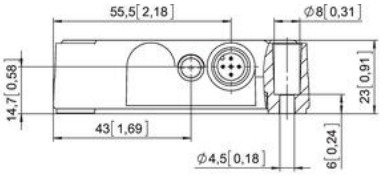
55,5[2,18]
⌀8[0,31]
14,7[0,58]
23[0,91]
43[1,69]
⌀4,5[0,18]
6[0,24]

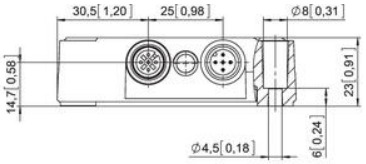
30,5[1,20]
25[0,98]
⌀8[0,31]
14,7[0,58]
23[0,91]
⌀4,5[0,18]
6[0,24]

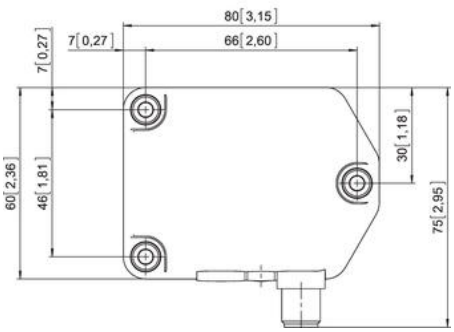
80[3,15]
7[0,27]
7[0,27]
66[2,60]
30[1,18]
60[2,36]
46[1,81]
75[2,95]

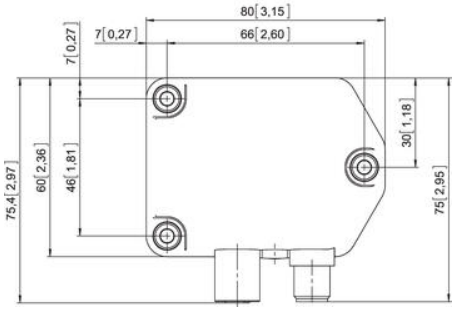
80[3,15]
7[0,27]
7[0,27]
66[2,60]
30[1,18]
75,4[2,97]
60[2,36]
46[1,81]
75[2,95]