OEM Automatic Ltd
Address: Whiteacres, Whetstone Leicester, LE8 6ZG
0116 284 9900 | Orders@oem.co.uk | www.oem.co.uk

KUEBLER - MAGNET SENSOR LI20 WITH MAGNETIC RING RI20

SERIE 8.LI20



- Robust and able to withstand vibration
- Easy to install
- High resolution
- IP67. Impervious to chips, oil, water, etc.

PRODUCT DESCRIPTION

The combination RI20/LI20 is used to measure length via a rotary shaft, e.g. in woodturning machines, materials handling, overhead cranes, etc. This sensor is more or less totally impervious to chips, oil, dust and water and thus can be used in troublesome environments, it is sealed and has no moving parts. The sensor is fitted to read on a yoke. This yoke is available for shaft dimensions 8-30 mm. There are three different yoke sizes; 31 mm, 41.2 mm and 45 mm.
The yoke RI20 has a pole distance of 2 mm. The distance between the sensor and the yoke should be 0.1 to 1.0 mm (recommended 0.4 mm). For the magnet sensor, the slope must not exceed ±3°, the rotation must not exceed ±3° and the offset must not exceed ±1 mm.

The following information is required to select the right combination:
- yoke size
- max. shaft rotation speed (given the frequency to following systems)

Pulses/revolution	Yoke	Magnet sensor	Max. revolutions (rpm)
250	RI20.031.XXXX	LI20.11X1.2005	12000
1000	RI20.031.XXXX	LI20.11X1.2020	2400
2500	RI20.031.XXXX	LI20.11X1.2050	3900
1024	RI20.041.XXXX	LI20.11X1.2016	7000
360	RI20.045.XXXX	LI20.11X1.2005	12000
3600	RI20.045.XXXX	LI20.11X1.2050	2700

Please refer to the images below for ordering information.

;

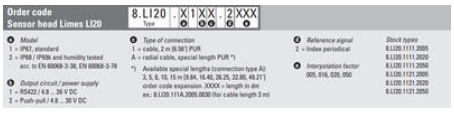

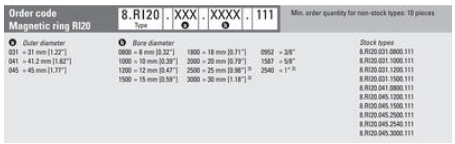

Pin assignment:

Signal	Wire colour
0 V, GND	white
U_B	brown
A	green
$\overline{A}$	yellow
B	grey
$\overline{B}$	pink
I	blue
$\overline{I}$	red

Shield is on the housing

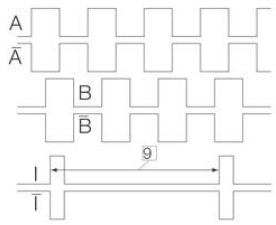

9 Period indexsignal

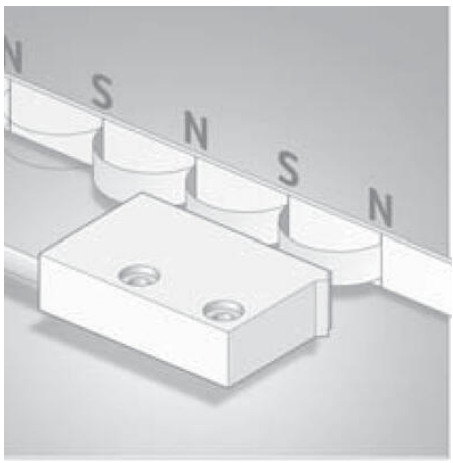

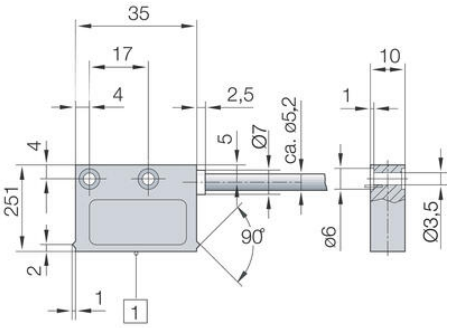

1 Mätpunkt

Magnetring 8.RI20.031.XXXX.111, ø 31 mm

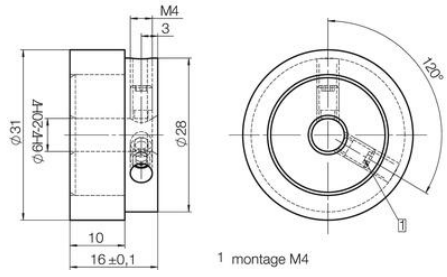

1 montage M4

Order code Sensor head Limes LI20 8.LI20 . X 1 XX . 2 XXX

❶ Model	❷ Type of connection	❸ Reference signal	Stock types
1 = IP67, standard 2 = IP68 / IP69k and humidity tested acc. to EN 60068-3-38, EN 60068-3-78	1 = cable, 2 m [6.56'] PUR A = radial cable, special length PUR *) *) Available special lengths (connection type A): 3, 5, 8, 10, 15 m [9.84, 16.40, 26.25, 32.80, 49.21'] order code expansion .XXXX = length in dm ex.: 8.LI2I.111A.2005.0030 (for cable length 3 m)	2 = Index periodical	8.LI2I.1111.2005 8.LI2I.1111.2020 8.LI2I.1111.2050 8.LI2I.1121.2005 8.LI2I.1121.2020 8.LI2I.1121.2050
❷ Output circuit / power supply 1 = RS422 / 4.8 ... 36 V DC 2 = Push-pull / 4.8 ... 30 V DC		❹ Interpolation factor 005, 010, 020, 050	

Order code Magnetic ring RI20 8.RI20 . XXX . XXXX . 111

Min. order quantity for non-stock types: 10 pieces

❶ Outer diameter	❷ Bore diameter			Stock types
031 = 31 mm [1.22"]	0800 = 8 mm [0.32"]	1800 = 18 mm [0.71"]	0952 = 3/8"	8.RI20.031.0800.111
041 = 41.2 mm [1.62"]	1000 = 10 mm [0.39"]	2000 = 20 mm [0.79"]	1587 = 5/8"	8.RI20.031.1000.111
045 = 45 mm [1.77"]	1200 = 12 mm [0.47"]	2500 = 25 mm [0.98"] 1)	2540 = 1" 1)	8.RI20.031.1200.111
	1500 = 15 mm [0.59"]	3000 = 30 mm [1.18"] 1)		8.RI20.031.1500.111
				8.RI20.041.0800.111
				8.RI20.045.1200.111
				8.RI20.045.1500.111
				8.RI20.045.2500.111
				8.RI20.045.2540.111
				8.RI20.045.3000.111

Pin assignment:

Signal	Wire colour
0 V, GND	white
U_B	brown
A	green
$\overline{A}$	yellow
B	grey
$\overline{B}$	pink
I	blue
$\overline{I}$	red

Shield is on the housing

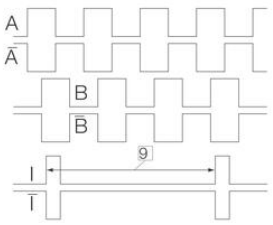

9 Period indexsignal

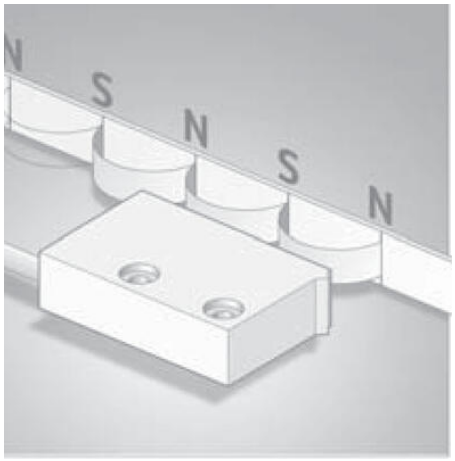

Magnetring 8.RI20.031.XXXX.111, ø 31 mm

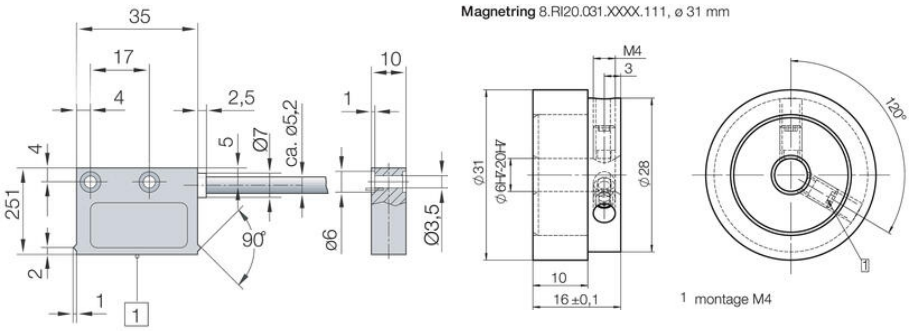

1 Mätpunkt