OEM Automatic Ltd
Address: Whiteacres, Whetstone Leicester, LE8 6ZG
0116 284 9900 | Orders@oem.co.uk | www.oem.co.uk

IDEM TONGUE INTERLOCK SAFETY SWITCHES INCH-1

INCH-1

222001
INCH-1 M16 '2NC'

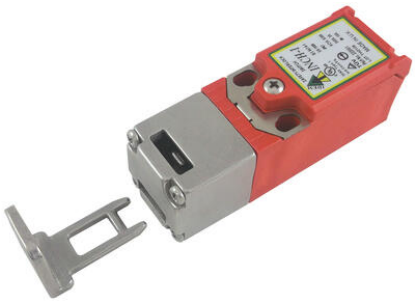

- Miniature plastic housing
- 8 actuator entry positions
- Rotatable stainless steel 316 head
- 2 pole contact blocks
- IP67 ingress protection

PRODUCT DESCRIPTION

Features

- IDEM INCH-1 Compact Safety Interlock switches are designed to provide position interlock detection for small moving guards.
- They are designed to fit to the leading edge of sliding, hinged or lift off machine guards.
- The rugged Stainless Steel actuator profile is designed to match a cam mechanism to provide a positively operated not easily defeated interlock mechanism.
- The compact body only 25mm wide with 18mm fixing centres and rotatable head make them easy to install where space is restricted.
- The rotatable heads have dual actuator entry positions to give up to 8 different entry positions.
- A Plastic Flexible Actuator is available for tight radius guards.
- Contact blocks are replaceable 2NC or 1NC 1NO.

Application
IDEM Tongue operated Safety Interlock switches are designed to fit to the leading edge of sliding, hinged or lift off machine guards to provide positively operated switching contacts and provide a tamper resistant, not easily defeatable key mechanism.
They are designed to provide robust position interlock detection for moving guards.
Depending upon the risk assessment for the application, they can be used independently to provide positively operated contacts to EN60947-5-1 or they can be used in combination with any dual channel safety monitoring relays to provide up to Category 4 PLe ISO13849-1 or SIL3 EN62061.
They are available in various materials and housing styles to provide complete flexibility of choice depending upon the application.
They offer a choice of contact blocks (including Explosion Proof) and various actuators to aid installation and maintain durability.

Operation
The switch is rigidly mounted to the frame of the guard or machine. The actuator is fitted to the moving part (frame) of the guard and is aligned to the switch entry aperture. The actuator profile is designed to match a cam mechanism within the switch head and provides a positively operated not easily defeatable interlock switch. When the actuator is inserted into the switch the safety contacts close and allow the machine start circuit to be enabled. When the actuator is withdrawn from the switch the safety contacts are positively opened and the machine circuit is broken. Standard versions use high specification plastic or die-cast housings and are sealed to IP67 and provide long term protection against moisture ingress. For harsh applications like Food Processing, Pharmaceutical and Petro-Chemical Industries the Stainless Steel 316 range offers protection up to IP69K for use in high pressure chemical cleaning or CIP/SIP applications.

TECHNICAL DATA

Actuator	Not included
Annual usage	8 cycles per hour/24 hours per day/365 days
Approvals	ISO 14119, EN60947-5-1, EN60204-1, ISO 13849-1, EN62061, UL 508
ATEX approved	No
Conduit entry	M16
Contacts	2NC

Head material	Stainless steel 316
Housing material	Glass fibre polyester
IP class	IP67
Maximum approach / withdrawal speed	600 mm/s
Mechanical reliability B10d	2.5 x 10^6 operations at 100mA load
Mounting	2 x M4
MTTFd	356 years
Operating temperature	-25..80°C
PFHd	3.44 x 10^{-8}
PL	e acc. ISO13849-1
Rated insulation voltage	600V ac
SIL	3 acc. EN62061
Thermal current (Ith)	5 A
Travel for positive opening	6 mm
Withstand voltage	2500V ac



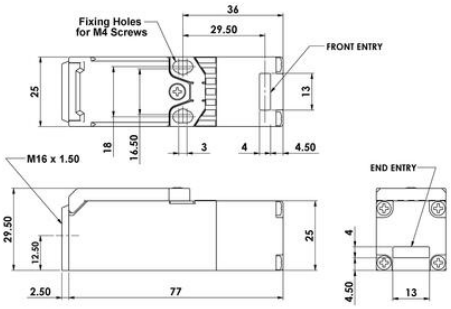

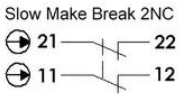

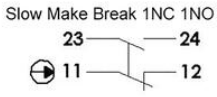

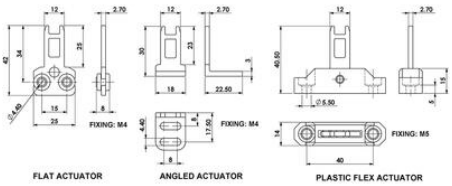



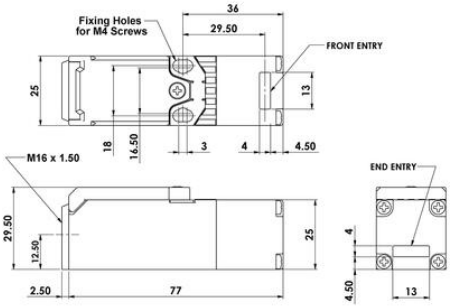

Slow Make Break 2NC

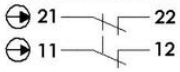

Slow Make Break 1NC 1NO



