**OEM Automatic Ltd**
Address: Whiteacres, Whetstone Leicester, LE8 6ZG
0116 284 9900 | Orders@oem.co.uk | www.oem.co.uk

# IDEM - TONGUE INTERLOCK SAFETY SWITCHES – K-15

K-15

207001
K-15 M20 '2NC 1NO'



- 4 Actuator entry positions with a rotatable head. Plastic or stainless steel 316 head options
- Compact body with 3 conduit entries
- 3 pole contact blocks
- 54 mm x 86 mm 40mm fixing
- IP67 ingress protection rating

### PRODUCT DESCRIPTION

Features

- The K-15 Safety Interlock switch is designed to provide position interlock detection for moving guards
- They are designed to fit to the leading edge of sliding, hinged or lift off machine guards
- They offer a compact 86mm long body to fit to applications where space is restricted, yet offer 3 pole contacts and choice of 3 conduit entries for wiring versatility
- The head can be rotated to give 4 actuator entry positions



- Designed with a hinged lid to fit replacable contact blocks
- Flexible actuators are available and the K-15 is available with a stainless steel head

## TECHNICAL DATA

| | |
|---|---|
| **Actuator** | Not included |
| **Annual usage** | 8 cycles per hour/24 hours per day/365 days |
| **Approvals** | ISO 14119, EN60947-5-1, EN60204-1, ISO 13849-1, EN62061, UL 508 |
| **ATEX approved** | No |
| **Conduit entry** | M20 |
| **Contacts** | 2NC 1NO |
| **Head material** | Polyester |
| **Housing material** | Polyester |
| **IP class** | IP67 |

| | |
|---|---|
| **Maximum approach / withdrawal speed** | 600 mm/s |
| **Mechanical reliability B10d** | 2.5 x $10^6$ operations at 100mA load |
| **Mounting** | 2 x M5 |
| **MTTFd** | 356 years |
| **Operating temperature** | -25..80°C |
| **PFHd** | 3.44 x $10^{-8}$ |
| **PL** | e acc. ISO13849-1 |
| **Rated insulation voltage** | 500V ac |
| **SIL** | 3 acc. EN62061 |
| **Thermal current (Ith)** | 5 A |
| **Travel for positive opening** | 8 mm |
| **Withstand voltage** | 2500V ac |

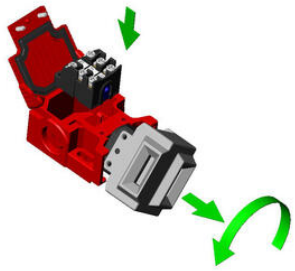

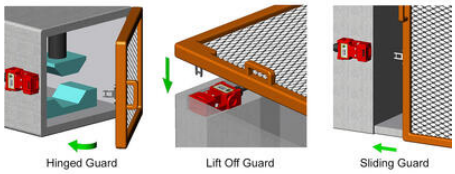





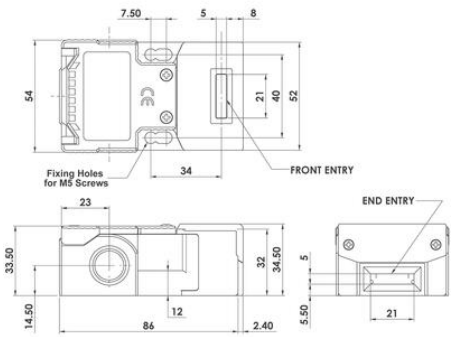


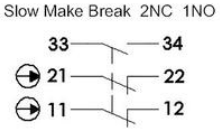


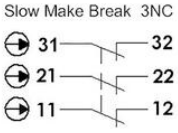


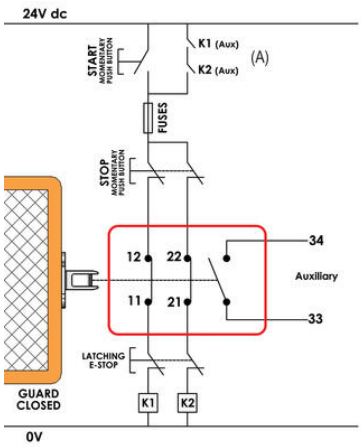

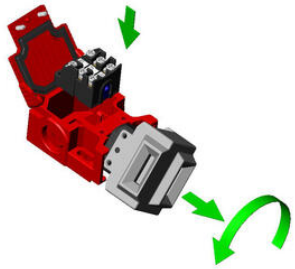

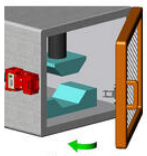
Hinged Guard

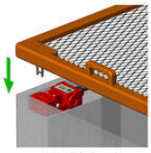
Lift Off Guard


Sliding Guard




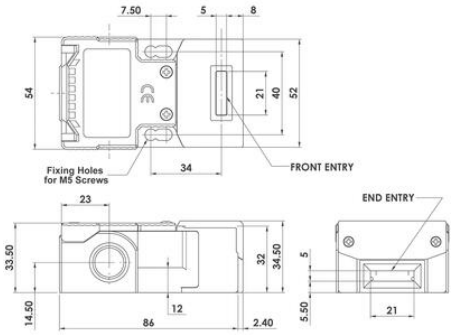


Slow Make Break 2NC 1NO

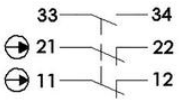


Slow Make Break 3NC

