OEM Automatic Ltd
Address: Whiteacres, Whetstone Leicester, LE8 6ZG
0116 284 9900 | Orders@oem.co.uk | www.oem.co.uk

DATALOGIC - PROTECTIVE STAND SG-PSB & SG-PSM

SG-PSB-600
95ASE2240 Protective stand h=600mm



- Protective stand SG-PSB, height 600-1900 mm
- Protective stand with mirrors SG-PSM
- Quick vertical and axial alignment

PRODUCT DESCRIPTION

Datalogic SG-PSB is a new protective stand series for safety light curtains. It makes the installation of the light curtain more cost effective and even easier with height, angle and camber adjustments.

SG-PSB is a protective aluminium profile mounted on a steel base made by two plates.
Flatness regulation is achieved through 3 grains and spherical level ball.
Angular regulation is achieved in two steps; rough positioning thanks to the grooves on upper plate that are positioned at most common angles (30, 45, 60, 90 degrees); and fine adjustment thanks to 3 eyelets that guarantee ± 10 ° of angular regulation.

SG-PSM is completely new and integrates into SG-PSB single mirrors for typical body or access perimeter protection.

Four different models for 2, 3, 4 beams body protection 500, 800, 900 and 1200 mm controlled height whose mirrors are positioned according to EN-999 standard. Each deviating mirror is tilt independently adjustable through 3 dedicated screws.

By adding SG-P accessories made by an additional square plate together with 3 load springs; the entire system gains the capability both to recover floor or mounting surface irregularities and to absorb shocks and vibrations.




DATALOGIC

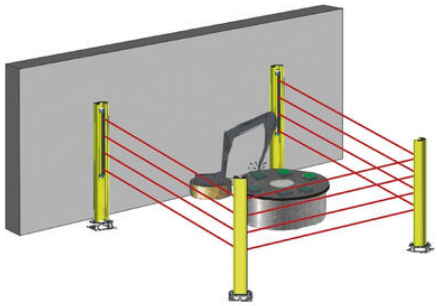

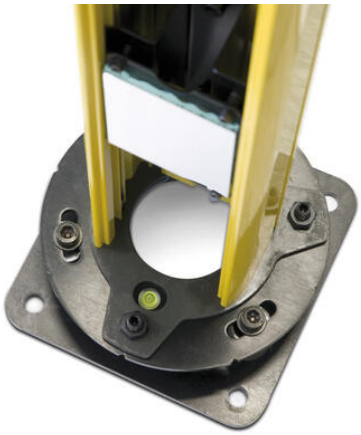





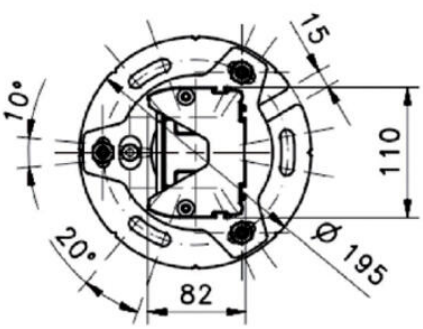
15
10°
110
20°
82
Ø 195

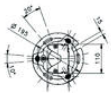



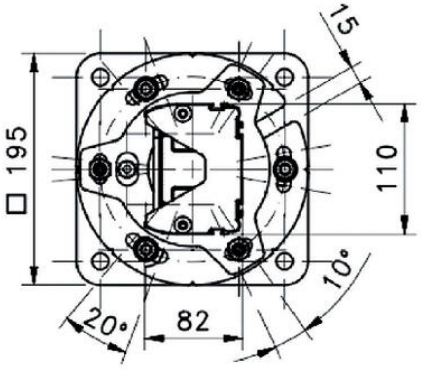
15
□ 195
110
10°
20°
82

