OEM Automatic Ltd
Address: Whiteacres, Whetstone Leicester, LE8 6ZG
0116 284 9900 | Orders@oem.co.uk | www.oem.co.uk

IDEM HINGE SWITCH Z-SERIES HS-SS-Z

352001
HS-SS-Z Hinge Switches, stainless Steel, 5M, right



- IP67/IP69K
- -25°C to +55°C
- PL e at serial coupling
- Mounted as a regular hinge

PRODUCT DESCRIPTION

The HS-SS-Z is a stainless-steel hinge safety interlock switch from IDEM's Z-Range, featuring a compact low-profile 316 SS housing rated IP69K for washdown resistance and corrosion protection. It delivers dual-channel OSSD safety outputs plus a normally open auxiliary status output, allowing wiring of up to 30 switches in series while maintaining PLe/CAT 4/SIL 3 safety performance when used with a suitable dual-channel safety relay or controller. The actuation, factory-set at approximately 3° door opening, adjustable up to 10° and then mechanically pinned—ensures precise and tamper-resistant guard detection. LEDs on the device indicate input, output, and guard status, facilitating fast diagnostics and fault detection via the auxiliary output or safety relay channel.
Designed to mount directly on the hinge axis of guard doors, the HS-SS-Z combines hinge support with position sensing, eliminating the need for external actuators or bulky switch heads. This sleek mounting conserves space, minimises snag hazards, and simplifies installation and cleaning, making it particularly suitable for food & beverage, pharmaceutical, and packaging environments where hygiene and reliability are paramount. With a robust axial load capacity (~800 N), stainless steel build, and IP69K sealing, it tolerates mechanical stress, washdowns, and corrosive agents while helping reduce downtime. The wide compatibility with standard safety relays and straightforward LED diagnostics support integration with PLCs or safety controllers, enabling efficient fault monitoring and maintenance diagnostics in industrial safety systems.

TECHNICAL DATA

Approvals	ISO 13849-1, ISO 14119, EN60204-1, EN62061, IEC 60947-5-1, UL 508
Cable length	5 m
Contact rating max	24Vdc 0.2A
Housing material	Stainless steel 316
Integrated LED indication	Yes
IP class	IP67, IP69K
Mounting	7 x M5
Operating temperature	-25°C +55°C
PL	up to PLe acc. ISO13849-1
Safety category	4
SIL	up to SIL3 acc. EN62061
Solenoid Voltage	24V dc

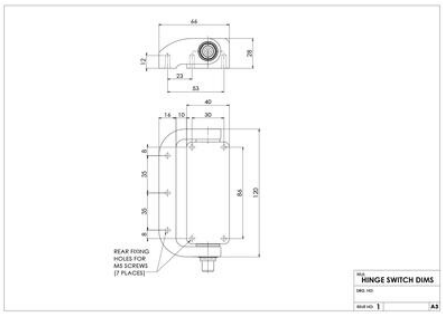
44
12
28
23
53
40
14
10
30
8
35
84
120
38
8
REAR FIXING HOLES FOR M5 SCREWS (7 PLACES)
HINGE SWITCH DIMS
A3

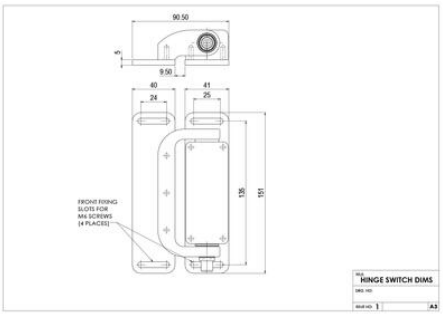
90.50
5
9.50
40
41
24
25
135
151
FRONT FIXING SLOTS FOR M6 SCREWS (4 PLACES)
HINGE SWITCH DIMS
A3

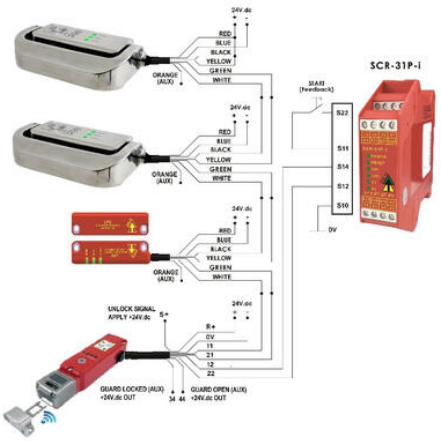
24V.dc
RED
BLUE
BLACK
YELLOW
GREEN
WHITE
ORANGE (AUX)
SCR-31P-i
START (Feedback)
S22
S11
S14
S12
S10
0V
UNLOCK SIGNAL APPLY +24V.dc
S+
R+
0V
11
21
12
22
GUARD LOCKED (AUX) +24V.dc OUT
34 44
GUARD OPEN (AUX) +24V.dc OUT

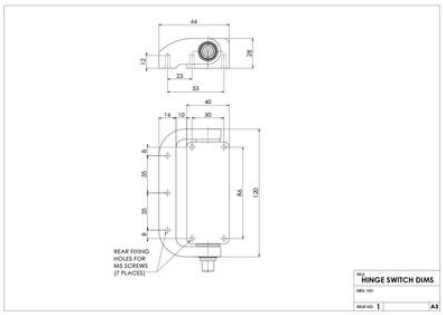
44
12
28
23
53
40
14
10
30
8
35
84
120
38
8
REAR FIXING HOLES FOR M5 SCREWS (7 PLACES)
HINGE SWITCH DIMS
A3

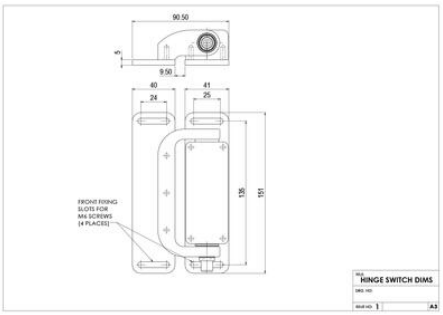
90.50
5
9.50
40
41
24
25
135
151
FRONT FIXING SLOTS FOR M6 SCREWS (4 PLACES)
HINGE SWITCH DIMS
A3

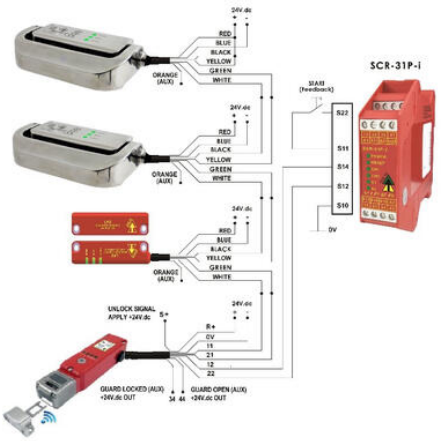
24V.dc
RED
BLUE
BLACK
YELLOW
GREEN
WHITE
ORANGE (AUX)
SCR-31P-i
START (Feedback)
S22
S11
S14
S12
S10
0V
UNLOCK SIGNAL APPLY +24V.dc
S+
R+
0V
11
21
12
22
GUARD LOCKED (AUX) +24V.dc OUT
34 44
GUARD OPEN (AUX) +24V.dc OUT