OEM Automatic Ltd
Address: Whiteacres, Whetstone Leicester, LE8 6ZG
0116 284 9900 | Orders@oem.co.uk | www.oem.co.uk

IDEM HINGE SWITCH Z-SERIES HSM-Z

353001
HSM-Z Right 5M



- IP67/IP69K
- -25°C to +55°C
- PL e at serial coupling
- Mounted as a regular hinge

PRODUCT DESCRIPTION

The HSM-Z, part of IDEM's Z-Range intelligent safety interlock portfolio, integrates directly into the hinge axis of guard doors, delivering both physical hinge support and safety switch functionality. Crafted from mirror-polished die-cast metal, it offers a rugged and hygienic design rated to IP67, suitable for washdowns and challenging environments. The switch provides two OSSD safety outputs along with a normally open auxiliary status output, supporting series connection of up to 30 devices while preserving PLe/SIL3 level safety via pulsed OSSD fault monitoring. The guard-open signal is preset at approximately 3° of door opening (factory-set), adjustable up to 10–12°, and mechanically pinned to resist tampering. Further characteristics include an 800 N axial holding force, operating temperature range of −25 °C to +80 °C, and optional wiring configurations via pre-wired cable or 8-pole M12 quick-connect.
The HSM-Z is particularly well-suited for applications where space is limited and hygienic design is important, such as food processing, pharmaceuticals, or packaging machinery. It mounts inconspicuously at the hinge of guard doors, eliminating bulky switch housings or external actuators while still ensuring secure guard interlock and physical support. The robust die-cast housing and high ingress protection make it resilient against washdown, dust, and mechanical abuse. Adjustability of actuation angle and the use of integrated cam actuation allows installers to precisely set switch performance, reducing nuisance trips or misalignment issues. Diagnostic feedback via OSSD fault pulses and the auxiliary output simplifies fault detection and integration with safety relays or PLCs, helping streamline wiring, commissioning, and maintenance in industrial settings.

TECHNICAL DATA

Approvals	ISO 13849-1, ISO 14119, EN60204-1, EN62061, IEC 60947-5-1, UL 508
Cable length	5 m
Contact rating max	24Vdc 0.2A
Housing material	Die cast metal
Integrated LED indication	Yes
IP class	IP67, IP69K
Mounting	7 x M5
Operating temperature	-25°C +55°C
PL	e
Safety category	4
SIL	3
Solenoid Voltage	24V dc

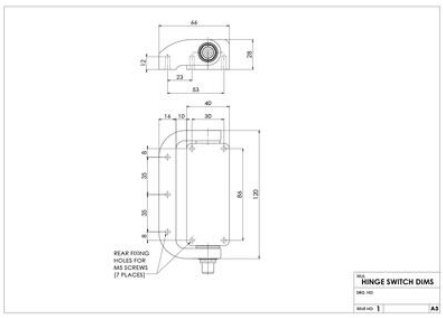
REAR FIXING
HOLES FOR
M5 SCREWS
(7 PLACES)
HINGE SWITCH DIMS
A3

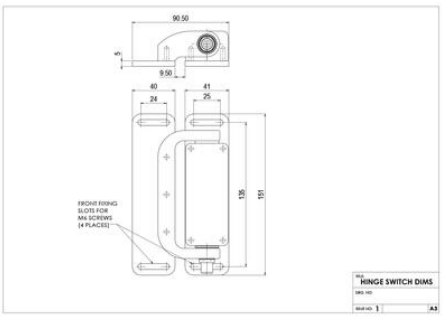
FRONT FIXING
SLOTS FOR
M5 SCREWS
(4 PLACES)
HINGE SWITCH DIMS
A3

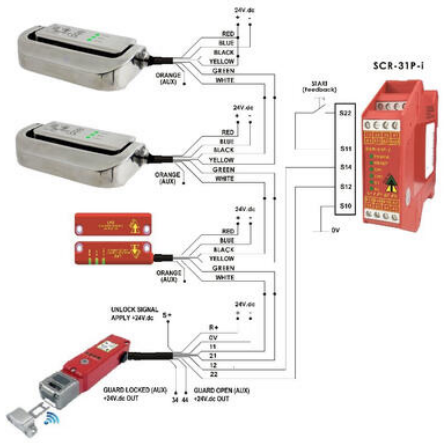
SCR-31P-i
24V dc
RED
BLUE
BLACK
YELLOW
GREEN
WHITE
ORANGE
(AUX)
START
(feedback)
S22
S11
S14
S12
S10
0V
UNLOCK SIGNAL
APPLY +24V dc
S+
R+
0V
11
21
12
22
GUARD LOCKED (AUX)
+24V dc OUT
34
44
GUARD OPEN (AUX)
+24V dc OUT

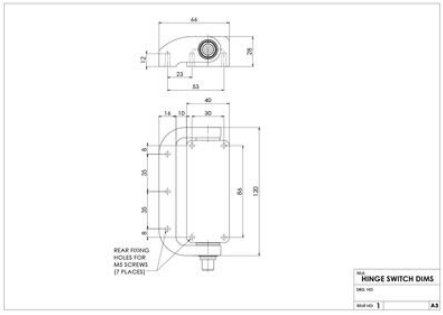
REAR FIXING
HOLES FOR
M5 SCREWS
(7 PLACES)
HINGE SWITCH DIMS
A3

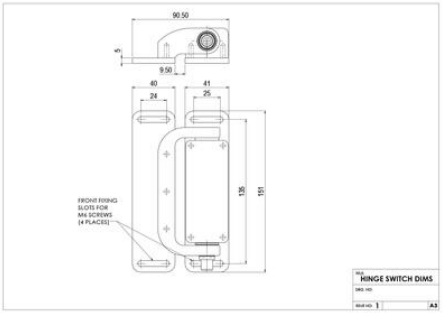
FRONT FIXING
SLOTS FOR
M5 SCREWS
(4 PLACES)
HINGE SWITCH DIMS
A3

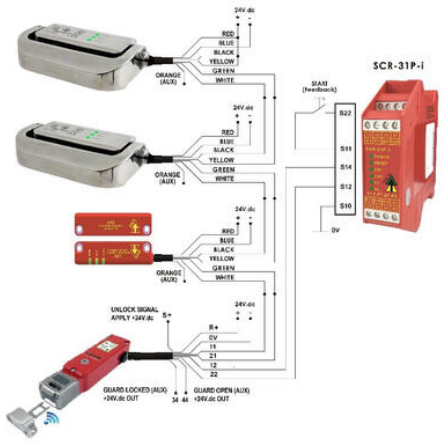
SCR-31P-i
24V dc
RED
BLUE
BLACK
YELLOW
GREEN
WHITE
ORANGE
(AUX)
START
(feedback)
S22
S11
S14
S12
S10
0V
UNLOCK SIGNAL
APPLY +24V dc
S+
R+
0V
11
21
12
22
GUARD LOCKED (AUX)
+24V dc OUT
34
44
GUARD OPEN (AUX)
+24V dc OUT