OEM Automatic Ltd
Address: Whiteacres, Whetstone Leicester, LE8 6ZG
0116 284 9900 | Orders@oem.co.uk | www.oem.co.uk

CROUZET SWITCHES - V4

83170002
C/0 W2 TERMINALS, STANDARD

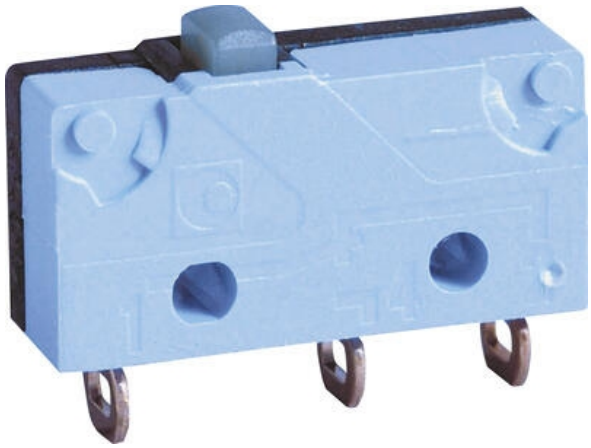

- Load 0.1-10 A 250 V ac
- Minimum load 1 mA 4 V dc
- Available with sponge trigger
- Control arm can be fitted in two different positions

PRODUCT DESCRIPTION

TECHNICAL DATA

Connection	W2
Contact gap	0.4 mm
Contact type	Changeover (SPDT)
Force of the return movement min	0.3 N
Hysteresis max	0.15 mm
IP class	IP40
Operating force max	1.5 N
Operating power total max	1.8 N
Overtravel min	0.5 mm
Permissible overvoltage max	10 N
Rated current at 250 V ac	10 A
Sleep max	9.2 mm
Switching point	8,4 ±0,3 mm
Temperature operational max	125 °C
Temperature operational min	-40 °C
Thermal current at 250 V ac	12.5 A

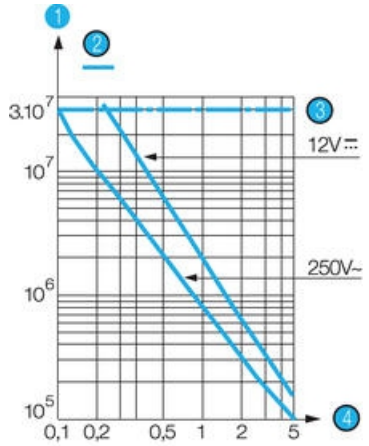

1 Number of cycles
2 Resistive load
3 Mechanical life
4 Current (A)

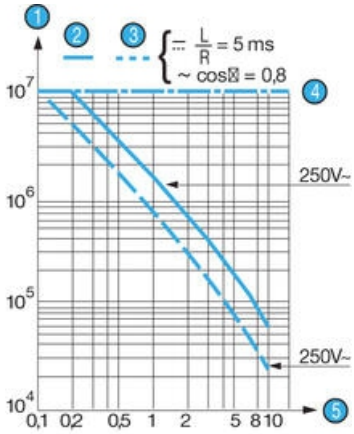

1 Number of cycles
2 Resistive load
3 Inductive load
4 Mechanical life
5 Current (A)

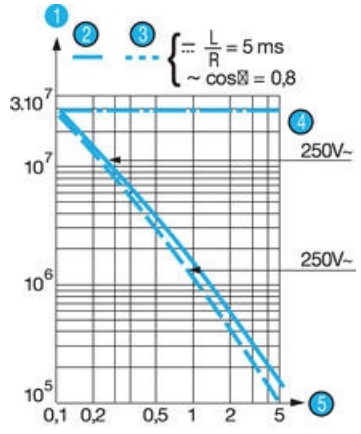

1 Number of cycles
2 Resistive load
3 Inductive load
4 Mechanical life
5 Current (A)

Electrical function

Partially



Breaking



Conclusion



W2

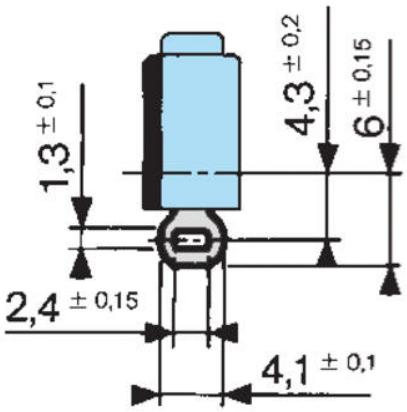

83 170
Asymmetric version

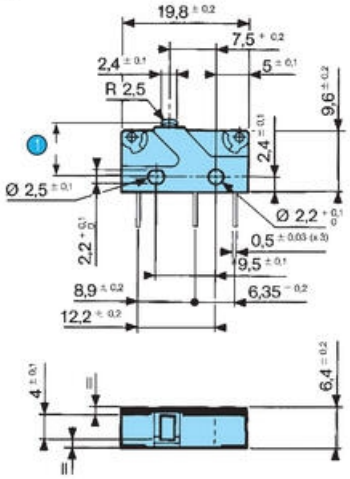

1 OL = 7.6

Mounted with M2 screws
Recommended tightening torque: 2 cm daN

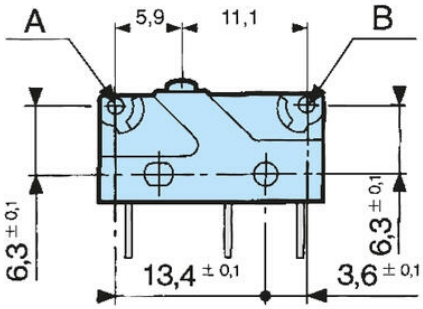

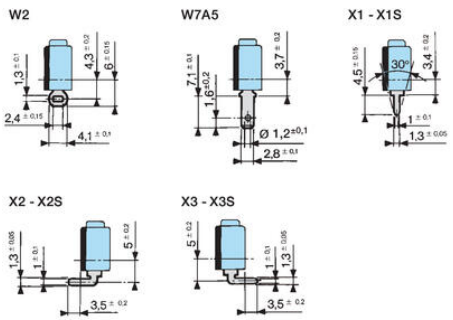

83 170 Symmetrical version

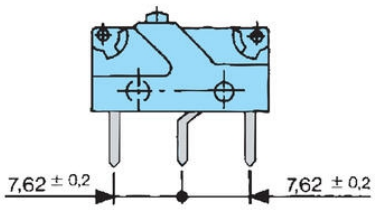

170 E
Arm with roll

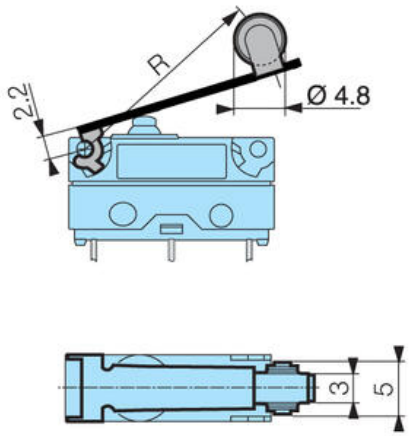

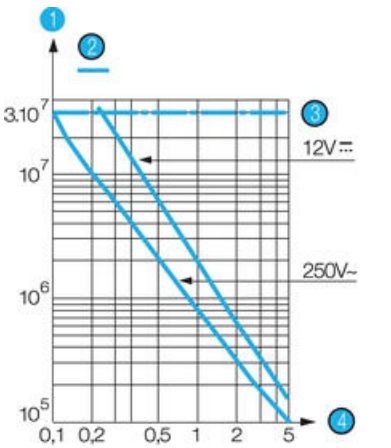

1 Number of cycles
2 Resistive load
3 Mechanical life
4 Current (A)

170 A
Straight-arm

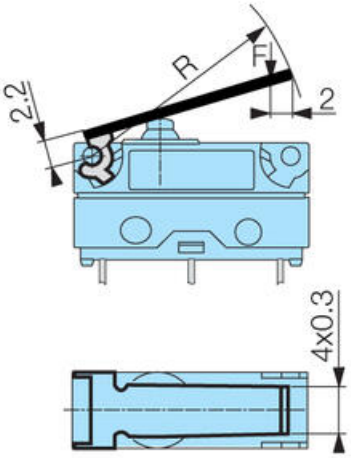

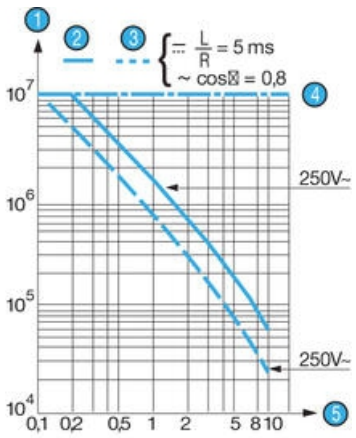

1 Number of cycles
2 Resistive load
3 Inductive load
4 Mechanical life
5 Current (A)

170 F
Arm with simulated scroll

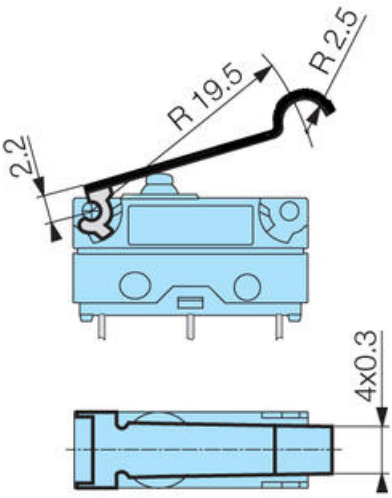

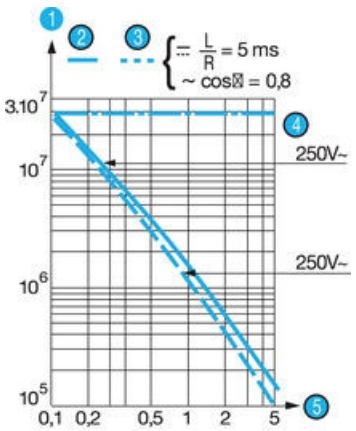

1 Number of cycles
2 Resistive load
3 Inductive load
4 Mechanical life
5 Current (A)

Electrical function

Partially



Breaking



Conclusion



83 170
Asymmetric version

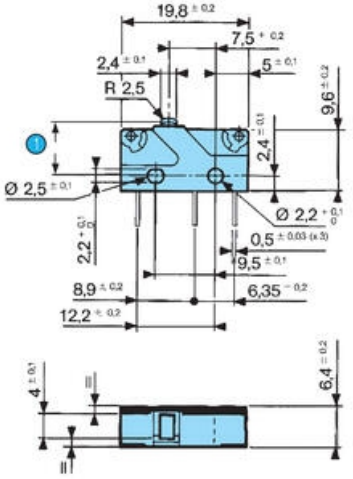

1 OL = 7.6

Mounted with M2 screws
Recommended tightening torque: 2 cm daN

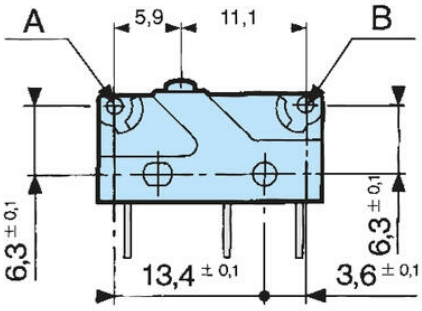

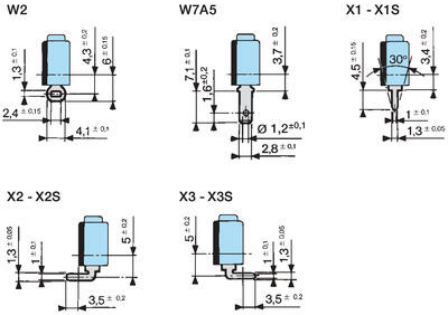

83 170 Symmetrical version

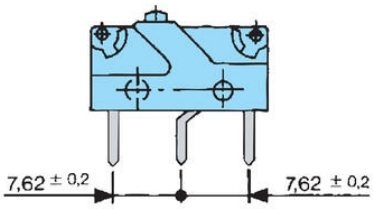

170 E
Arm with roll

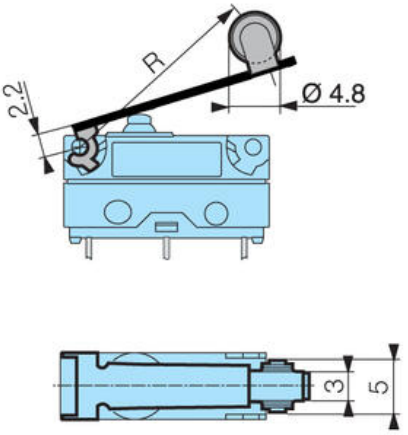

170 A
Straight-arm

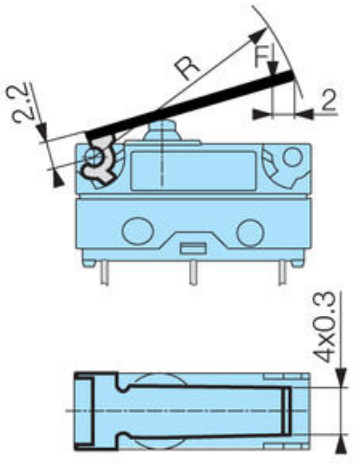

170 F
Arm with simulated scroll

