OEM Automatic Ltd
Address: Whiteacres, Whetstone Leicester, LE8 6ZG
0116 284 9900 | Orders@oem.co.uk | www.oem.co.uk

CROUZET SWITCHES - V3

83161806
MICROSWITCH C/O W3

- Rated data 0.1 A to 20 A/250 V ac
- Operating temperature up to +125 °C
- Compliant with standards EN 61058 and UL 1054
- Four different control arm installation options

PRODUCT DESCRIPTION

TECHNICAL DATA

Connection	W3
Contact gap	0.4 mm
Contact type	Changeover (SPDT)
Force of the return movement min	0.2 N
Hysteresis max	0.35 mm
IP class	IP40
Operating force max	0.8 N
Operating power total max	2 N
Overtravel min	1.2 mm
Permissible overvoltage max	20 N
Power min	0.001 A
Rated current at 250 V ac	5 A
Sleep max	16.2 mm
Switching point	14,7±0,3 mm
Temperature operational max	125 °C
Temperature operational min	-60 °C
Thermal current at 250 V ac	6 A
Voltage min	4 V

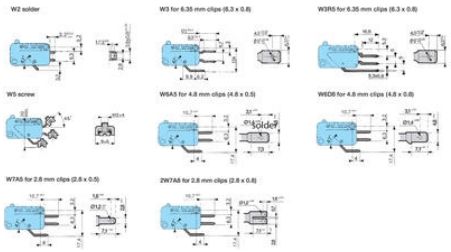

W3 for 6.35 mm clips (6.3 x 0.8)

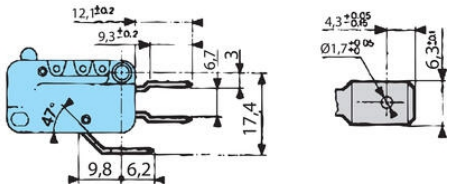

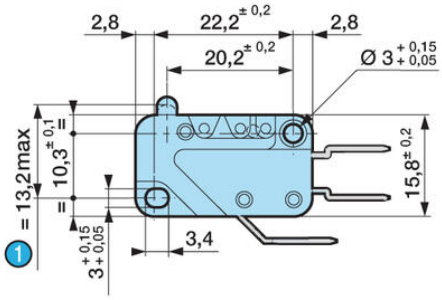

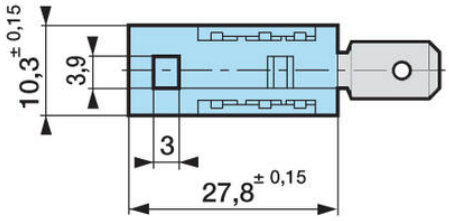

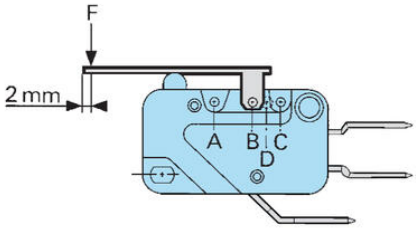

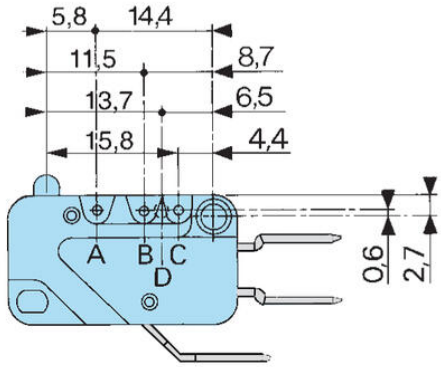

161 F

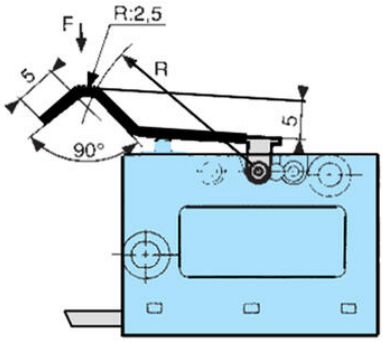

161 G

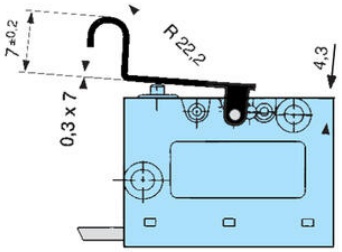

161 A

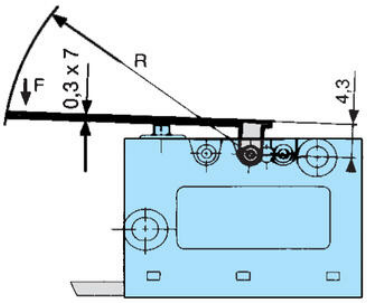

161 E

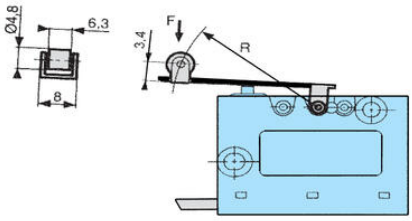

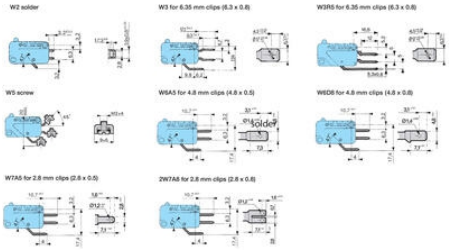

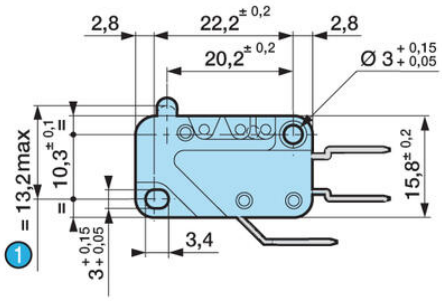

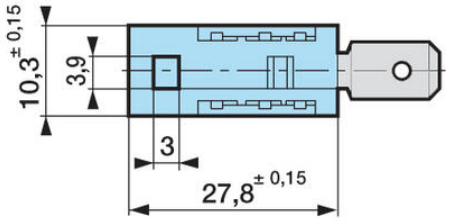

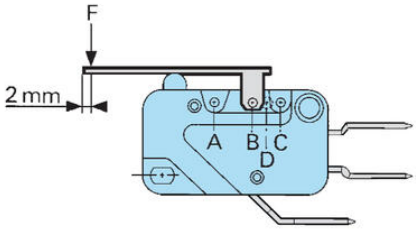

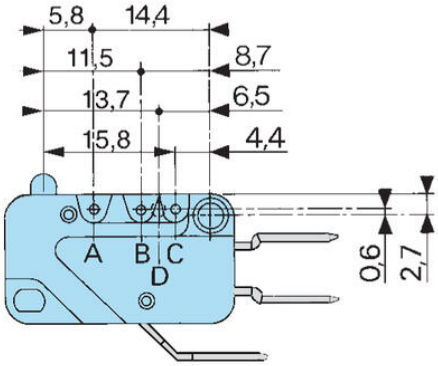

161 F

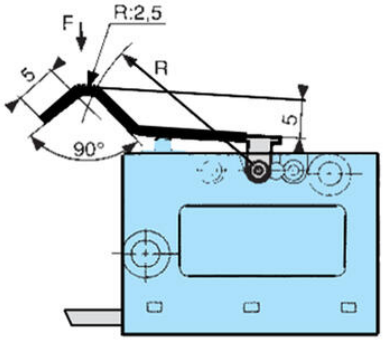

161 G

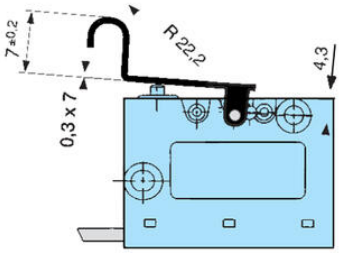

161 A

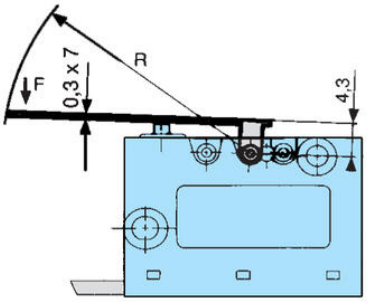
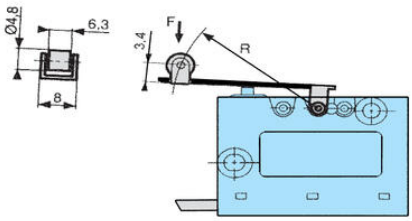
161 E