OEM Automatic Ltd
Address: Whiteacres, Whetstone Leicester, LE8 6ZG
0116 284 9900 | Orders@oem.co.uk | www.oem.co.uk

CROUZET SWITCHES - V3

83161102
831611 C/O W2



- Rated data 0.1 A to 20 A/250 V ac
- Operating temperature up to +125 °C
- Compliant with standards EN 61058 and UL 1054
- Four different control arm installation options

PRODUCT DESCRIPTION

TECHNICAL DATA

Connection	W2
Contact gap	0.4 mm
Contact type	Changeover (SPDT)
Force of the return movement min	1 N
Hysteresis max	0.35 mm
IP class	IP40
Operating force max	3 N
Operating power total max	4.5 N
Overtravel min	1.1 mm
Permissible overvoltage max	20 N
Rated current at 250 V ac	16 A
Sleep max	16.1 mm
Switching point	14,7±0,4 mm
Temperature operational max	125 °C
Temperature operational min	-60 °C
Thermal current at 250 V ac	20 A

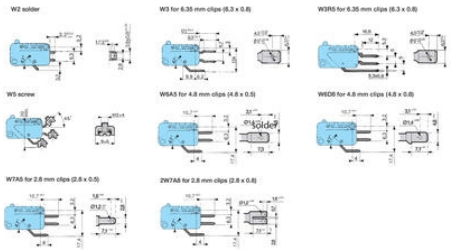

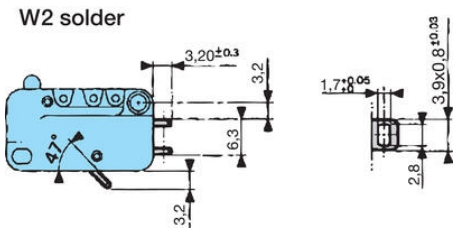

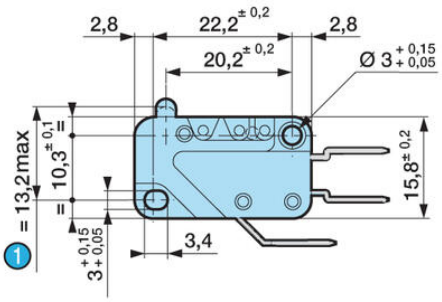

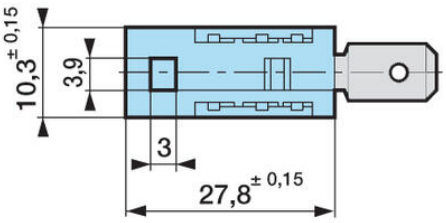

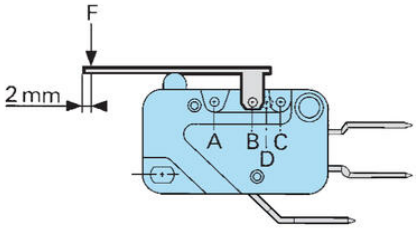

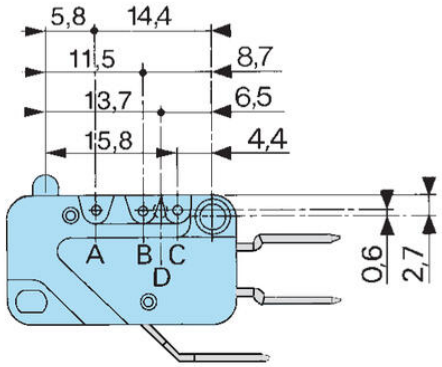

161 F

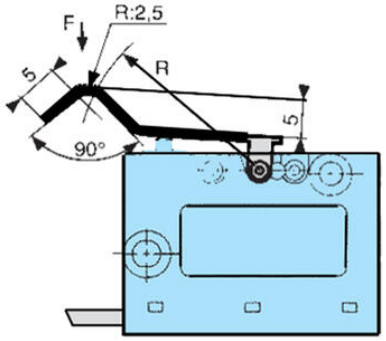

161 G

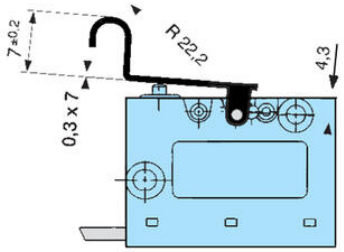

161 A

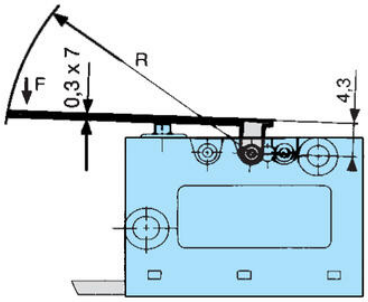

161 E

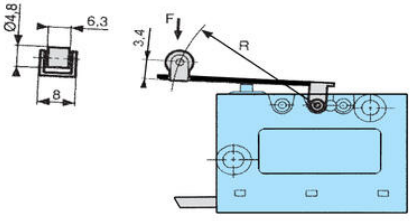

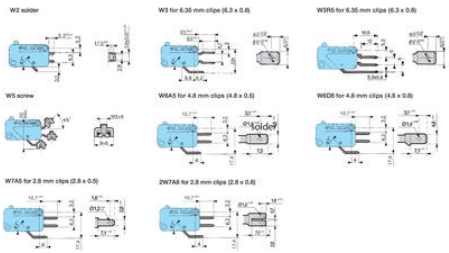

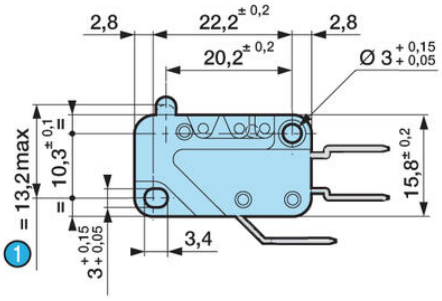

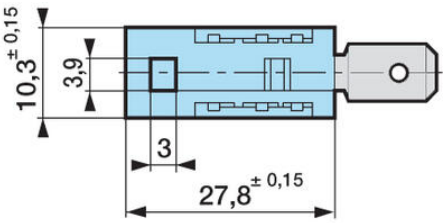

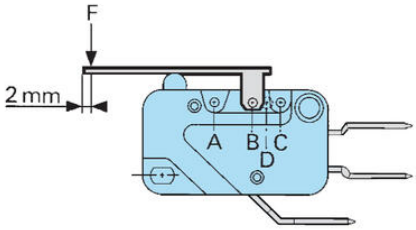

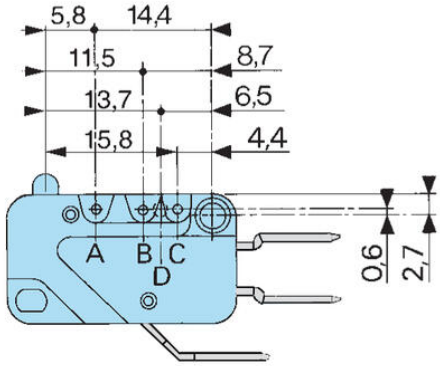

161 F

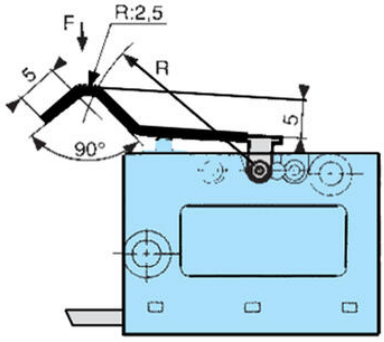

161 G

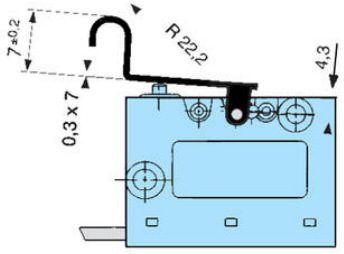

161 A

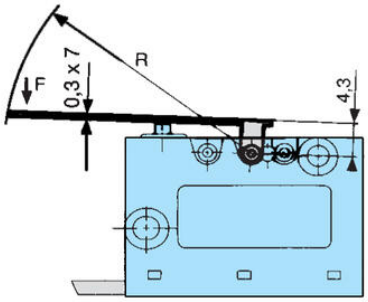

161 E

