OEM Automatic Ltd
Address: Whiteacres, Whetstone Leicester, LE8 6ZG
0116 284 9900 | Orders@oem.co.uk | www.oem.co.uk

CROUZET SWITCHES - MICROSWITCH, TIGHT V3, IP67

83169002
831690 STD C/O O/LET:D L:0.50

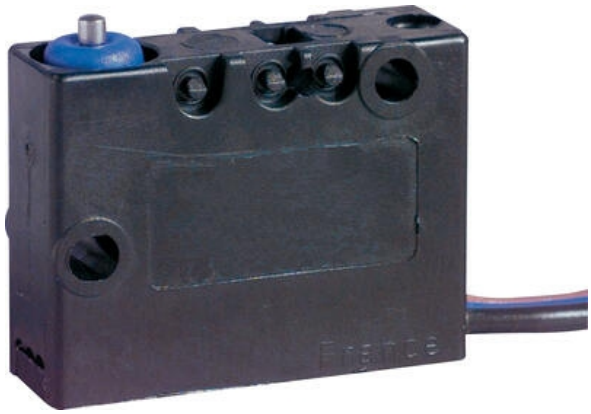

- Nominal rated current from 0.1 A to 10 A/250 V ac
- Lowest rated current 1 mA/4 V dc
- Cable output left or right

PRODUCT DESCRIPTION

TECHNICAL DATA

Cable length	500 mm
Connection	Leader exit right
Contact gap	0.4 mm
Contact type	Changeover (SPDT)
Force of the return movement min	1 N
Hysteresis max	0.35 mm
IP class	IP67, IP69
Operating force max	4.5 N
Operating power total max	8 N
Overtravel min	1 mm
Permissible overvoltage max	20 N
Rated current at 250 V ac	8 A
Sleep max	15.9 mm
Switching point	14,7±0,3 mm
Temperature operational max	105 °C
Temperature operational min	-40 °C
Thermal current at 250 V ac	10 A

Single break snap-action switch
Changeover - SPDT (form C)

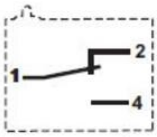

Cable outlet

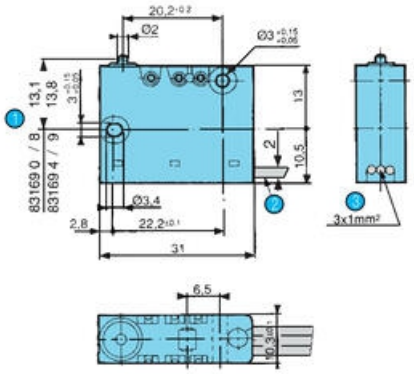

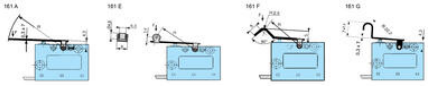

1 OL = 13.1
2 Right exit
3 Cable 1 mm²
1 = black cable (common)
2 = brown cable (NC)
4 = gray cable (NO)

Single break snap-action switch
Changeover - SPDT (form C)

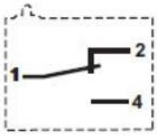

Cable outlet

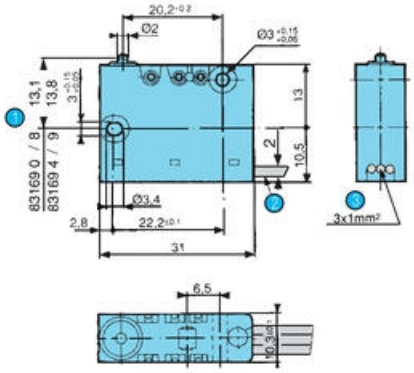

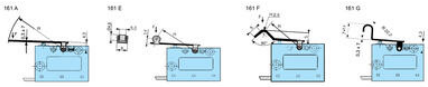

1 OL = 13.1
2 Right exit
3 Cable 1 mm²
1 = black cable (common)
2 = brown cable (NC)
4 = gray cable (NO)