OEM Automatic Ltd
Address: Whiteacres, Whetstone Leicester, LE8 6ZG
0116 284 9900 | Orders@oem.co.uk | www.oem.co.uk

PISA-11

PISA11.CLASS2
Protection Module 24V dc I/P 4 x 24V dc 3.7A O/P NEC-CLASS-2



- NEC Class 2 approved outputs
- For standard power supplies
- Outputs electronically protected
- 45 mm wide
- NEC Class 2 module. 4 x 3.7 A outputs

PRODUCT DESCRIPTION

In many cases deliveries to North America require the power supply to be NEC Class 2 approved. Puls offers several power supply alternatives with this approval. However, class 2 limits the power to less than 100W, which is not enough power in certain applications. The solution has then been to install more power supply units with separate feeds.
It is also possible to solve Class 2 circuits with external fuses, but this places many requirements and the feeding power supply must not under any circumstances, exceed 250 VA.
PISA11 offers a very flexible solution to the problems of NEC Class 2. PSA 11 has 4 NEC Class 2 approved outputs each of 3.7 A at 24 V dc. If the voltage increases the maximum current is automatically adjusted down to ensure Class 2 compliance. The main advantage is that the standard power supply can be used without the need of power restrictions. If more Class 2 outputs are required additional units are interconnected allowing full flexibility.
Each output is electronically protected providing safe and fast tripping in the event of a fault. Resetting takes place on the front, or via remote control. Note that all four outputs trip in the event of a fault, the channel that caused the fault is indicated on the front by a LED. PISA 11 also protects against low voltage, if the feeding power supply drops below 21 V dc the outputs trip. This ensures that a fault or overload does not lower e.g. a control system that is connected directly to the power supply.

Signals
Remote control and resetting
The signal inputs are galvanically isolated. In error mode the outputs trip and they can be remotely reset by connecting the voltage to terminals 11 and 12 for more than 1 second. In normal mode (no fault has occurred) the outputs can be controlled on and off with a short pulse (>50 ms).

Max. control voltage	30 V dc
Power consumption	Typical value: 3 mA, Max. 6 mA
Trigger level	Min: 6 V dc, Max. 10 V dc. Above this level the reset and On/Off function are activated
Galvanic isolation	500 V ac

Synchronization of multiple Pisa modules
If multiple Pisa modules are used for the same power supply we recommended to connect the Sync. connection to all devices. If a module shuts down due to low voltage from the power supply (protective function under 21 V dc) all modules shut down. Synchronization ensures that you can see which module received that low voltage. Without the sync. buss the module with the highest alarm level will shut down first, irrespective of whether the fault was on its input or not. (caused by tolerances).
If an error is caused by a short circuit or overload on an individual output, only the affected module will shut down, the sync. bus has no effect on other units in this mode.

Tripping
Pisa 11 compromises by having a fuse for all outputs, in the event of faults on one of the outputs all channels trip on the module. The channel causing the fault is indicated by a LED. The following causes can cause current limiting or tripping of the outputs.
1. Output current on one or more channels is too high.
2. The total output current for all channels exceeded.

3. The outputs were forced to shut down in order to maintain the voltage level.

Trip times when the current exceeds the rated current

Twice the rated current	1 sec. at 7.4 A
Short circuit	5 ms at 23.6 A

The shutdown time starts to countdown as soon as the rated current is exceeded. The trip time is never longer than 5 seconds to comply with NEC class 2 requirements.

TECHNICAL DATA

DIMENSIONS

Width	45 mm
Depth	91 mm
Height	75 mm

CONNECTION DATA

IP class	IP20

APPROVALS

Approvals	CB, CE, CSA, EAC, EX, GL, NEC Class 2, UL

ADDITIONAL DATA

Weight	0.12 kg

Type Power Supply	NEC Class 2
Series	Miniline
Temperature min without derating	-25 °C
Temperature max without derating	70 °C
Output voltage	24 V DC
Output voltage max	24 V DC
Output current per channel	3,7 A @ 24 V DC
Input voltage dc	18-30 V
Input voltage dc max	30 V DC
Input voltage dc min	18 V DC
Life span	220000 h @ 4x 1,9 A, 40 °C
Material protection	ABS plastic
MTBF (IEC 61709)	2198000 h @ 4x 1,9 A, 40 °C
Output voltage min	24 V DC

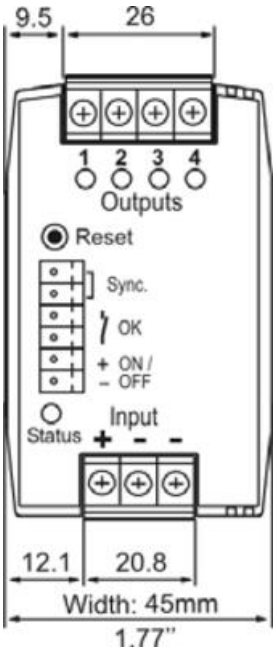
9.5
26
1 2 3 4
Outputs
Reset
Sync.
OK
+ ON /
– OFF
Status
Input
+ – –
12.1
20.8
Width: 45mm
1.77"

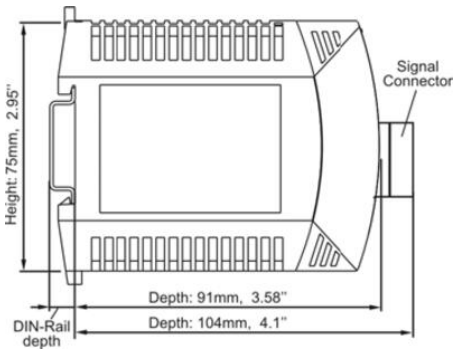
Signal
Connector
Height: 75mm, 2.95"
Depth: 91mm, 3.58"
DIN-Rail
depth
Depth: 104mm, 4.1"

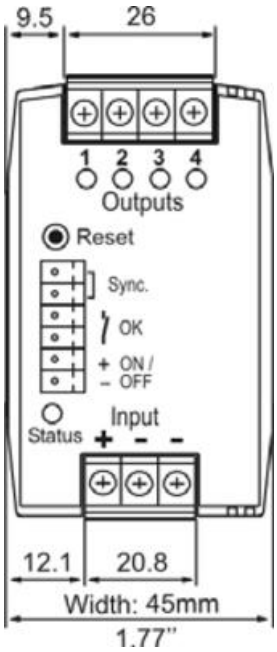
9.5
26
1 2 3 4
Outputs
Reset
Sync.
OK
+ ON /
– OFF
Status
Input
+ – –
12.1
20.8
Width: 45mm
1.77"

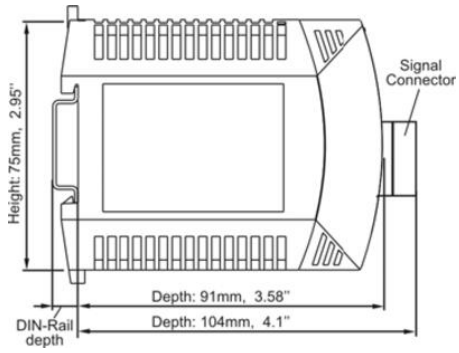
Signal
Connector
Height: 75mm, 2.95"
Depth: 91mm, 3.58"
DIN-Rail
depth
Depth: 104mm, 4.1"