OEM Automatic Ltd
Address: Whiteacres, Whetstone Leicester, LE8 6ZG
0116 284 9900 | Orders@oem.co.uk | www.oem.co.uk

WEST - P6010 AND P8010 PANEL INDICATOR

P80102100000010
WEST 48x96 IND TC 1R 230V



- Jumperless configuration
- Auto detected hardware
- Up to 4 alarm outputs
- Modbus and ASCII comms

PRODUCT DESCRIPTION

The 6010 and 8010 have multi-point scaling, tare function and improved flexibility.
They have a universal input and are available with a red of green display.
Plug-in modules allow up to four alarm relays (latching or non-latching), PV retransmission or transmitter PSU.

TECHNICAL DATA

TECHNICAL DATA

Dimensions	48x96
Input type	Universal (TC, RTD, DC linear mA/mV)
Output 1	Relay
Supply voltage	100-240 V AC
Communication	N/A
Additional features	N/A
Display colour	Red
IP class front	IP65
IP class	IP20

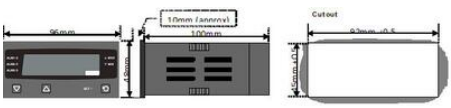

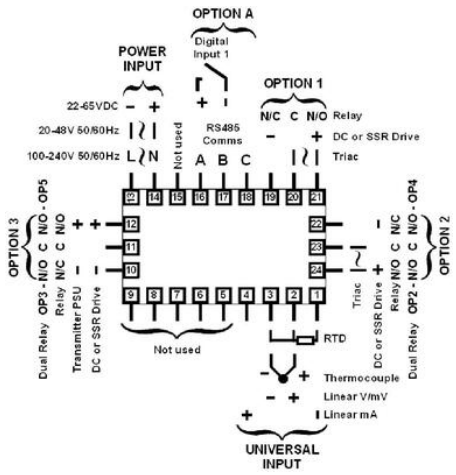
OPTION A
Digital Input 1
POWER INPUT
22-65VDC
20-48V 50/60Hz
100-240V 50/60Hz
L
N
Not used
RS485 Comms
A B C
OPTION 1
N/C C N/O Relay
DC or SSR Drive
Triac
OPTION 3
OP3 - N/O C N/C
OP5 N/O C N/O
Dual Relay
Relay
Transmitter PSU
DC or SSR Drive
Not used
RTD
Thermocouple
Linear V/mV
Linear mA
UNIVERSAL INPUT
OPTION 2
OP4 - N/C C N/O
OP2 - N/O C N/O
Dual Relay
Relay
DC or SSR Drive
Triac