OEM Automatic Ltd
Address: Whiteacres, Whetstone Leicester, LE8 6ZG
0116 284 9900 | Orders@oem.co.uk | www.oem.co.uk

WEST - P6170, P8170, P4170 VALVE MOTOR CONTROLLER

P41702111000R10
WEST 96x96 VALVE TC 3R RSP 230V



- Jumperless configuration
- Auto detected hardware
- Process and loop alarms
- Modbus comms

PRODUCT DESCRIPTION

The new Plus Series VMD Controllers (6170, 8170, 4170) have been specifically designed for open loop valve motor drive applications and feature the improved Plus Series interface and greater field flexibility.

TECHNICAL DATA

TECHNICAL DATA

Dimensions	96x96
Input type	Universal (TC, RTD, DC linear mA/mV)
Output 1	Relay
Output 2	Relay
Output 3	Relay
Supply voltage	100-240 V AC
Communication	N/A
Additional features	Full Remote Setpoint
Display colour	Red / red
Control type	PID with TPSC (VMD), Manual, Alarm, Ramp
IP class front	IP66
IP class	IP20

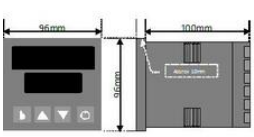

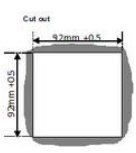

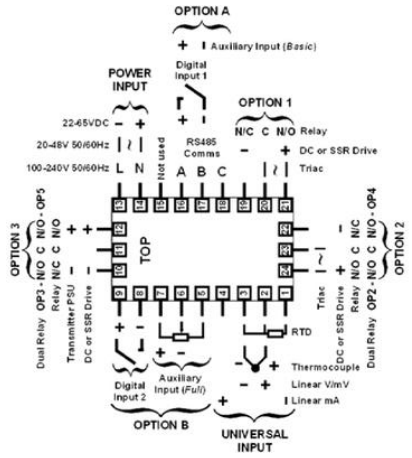
OPTION A
+ - Auxiliary Input (Basic)
POWER INPUT
Digital Input 1
OPTION 1
22-65VDC
20-48V 50/60Hz
100-240V 50/60Hz
L N
Not used
RS485 Comms
A B C
N/C C N/O Relay
DC or SSR Drive
Triac
OPTION 3
Dual Relay OP3 - N/O C N/O - OP5 Relay
Transmitter PSU N/C C N/O
DC or SSR Drive
TOP
Triac
DC or SSR Drive
Relay N/O C N/C
Dual Relay OP2 - N/O C N/O - OP4
OPTION 2
RTD
Thermocouple
Linear V/mV
Linear mA
Digital Input 2
Auxiliary Input (Full)
OPTION B
UNIVERSAL INPUT