OEM Automatic Ltd
Address: Whiteacres, Whetstone Leicester, LE8 6ZG
0116 284 9900 | Orders@oem.co.uk | www.oem.co.uk

HONSBERG - MR1K SERIES FLOW SWITCH

Piston

MR1K-025GM060
Flow switch 6-60l/min, G1, brass, DIN

- Switching Range 0,4..60 l/min H²O
- Water (oils, gases and aggressive media available on request)
- G¼ up to G1
- Brass or Stainless Steel Wetted Parts
- Max Pressure 200 bar

PRODUCT DESCRIPTION

Model MR1K is a flow switch for liquids and air/gases. It is in a robust and compact version. The switch can be ordered in a large variety of special versions including integrated flow meter, selectable switching range and high pressure version.

Special versions

- **Air version**
- **Integrated flow meter with visual scale**
- **High pressure version 500 bar**
- **Double switch heads**

TECHNICAL DATA

Accuracy	± 5% of the final value
Connection type	Internal thread 1 "
Contact rating max	50 VA
Electrical connection	Plug connector DIN 43650-A
Flow max	80 l/min
Flow range max	60 l/min
Flow range min	6 l/min
Function	Flask, reed contact, alternating
Hysteresis	Depending on the breaking value, however, at least 0.5 l / min
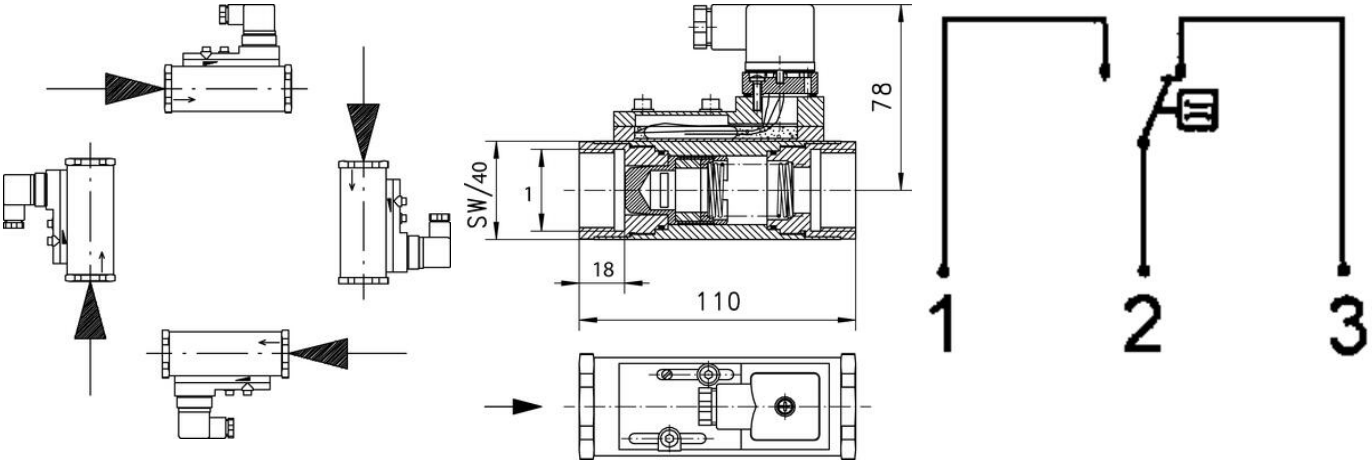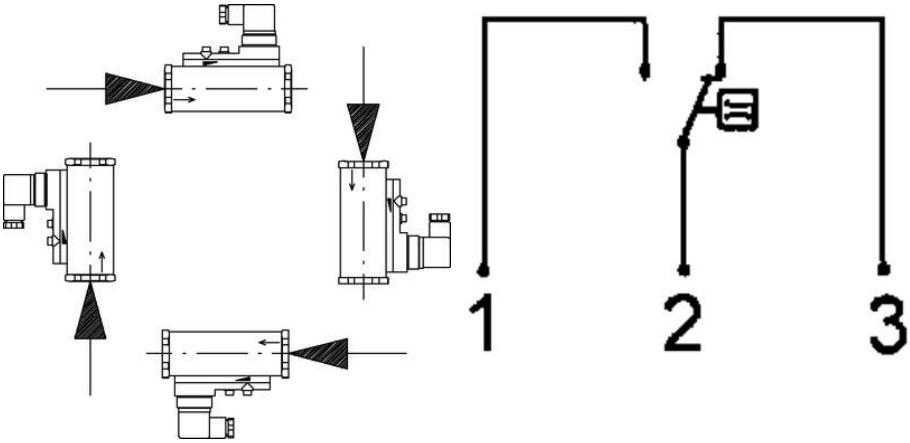
IP class	IP65
Material flask	Brass
Material of body	Nickel-plated brass
Material of seals	NBR
Material spring	Stainless steel 301
Media	Water (oil, air and aggressive liquids on request)
Pressure drop	1.4 bar at maximum flow
Pressure range max	200 bar
Temperature of media from	-20 °C
Temperature of media to	120 °C
Type of flow component	Flow Switches
Viscosity max	30 cSt
Viscosity min	1 cSt
Voltage ac max	120 V
Weight	1.1 kg