OEM Automatic Ltd
Address: Whiteacres, Whetstone Leicester, LE8 6ZG
0116 284 9900 | Orders@oem.co.uk | www.oem.co.uk

MOLEX - MPM DIN C INDUSTRIAL / DIN C OVERMOULDED CABLE

432N2N10011
Form C, 2P+Earth, H03 PVC, 1m Length, Profile Gasket



- Fully overmoulded providing a high level of protection
- Quick and simple installation
- With or without LED and transient protection
- 9.4 mm or 8 mm contact distance EN175301-803 (DIN43650-C Industrial/-C)

PRODUCT DESCRIPTION

DIN Valve Connectors with moulded cable, IP65 rated. IP67 version available on request. Conforms to EN 175301-803.

TECHNICAL DATA

Cable length	1 m
Circuit	No circuit
Colour LED	No
Connector	DIN C 8mm
Current max	3 A
IP class	IP65
LED indicator	No
Material cable	PVC
Material packing	NBR
Number of poles	2 + earth
Rated voltage	250 V
Rated wire cross section	0.5 mm²
Screw size	M2,5x22,5
Temperature operational max	90 °C
Temperature operational min	-40 °C

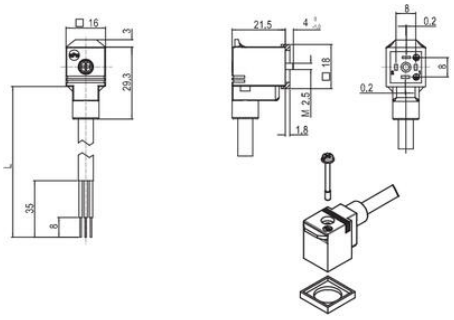
16
3
29,3
35
8
21,5
4
18
M 2,5
1,8
8
0,2
0,2
8