OEM Automatic Ltd
Address: Whiteacres, Whetstone Leicester, LE8 6ZG
0116 284 9900 | Orders@oem.co.uk | www.oem.co.uk

TRUNKING ACCESSORIES

VK-DH, SN-PA,

17951.4
VK-DHG-40, Wire holder in Black, 34 x 35 for VK series,
10 per pack



- Wire holders
- Partition pegs
- Rivets
- Tools

PRODUCT DESCRIPTION

Conta Clip have a range of accessories for both VK and VK-HF trunking that include various types of wire holder, including the VK-DHKB that can be used with a cable tie to further secure larger cables.
For speedy installation there are also a choice of plastic rivets and setting tool, notching pliers and duct cutter.

TECHNICAL DATA

GENERAL DATA

Width	34 mm
Height	35 mm
Colour	Black

MATERIALS

Material	Polycarbonate
Operating temperature from	-40 °C
Operating temperature to	90 °C

ADDITIONAL DATA

Pack size	10

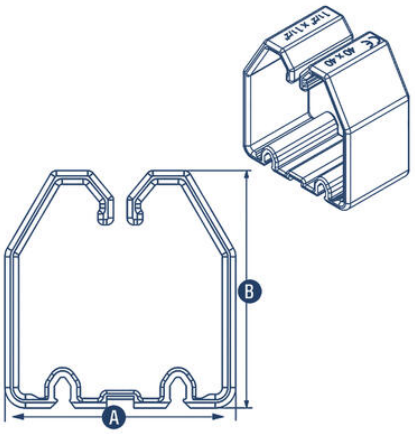
A
B