OEM Automatic Ltd
Address: Whiteacres, Whetstone Leicester, LE8 6ZG
0116 284 9900 | Orders@oem.co.uk | www.oem.co.uk

COMPACT LOOP HEATER 10 - 50W - LPS 164

LPS

16404.9-00
LP 164, 50W Slim line loop heater, 110V-265V ac/dc, UL approved

- Compact with small foot print
- Pre-cabled
- Wide voltage range
- PTC techhnology
- UL version available

PRODUCT DESCRIPTION

Compact Slim line PTC loop heater designed for continuous operation. The new loop design increases the efficiency of the chimney heating effect and has enabled the width to be reduced, saving space in the enclosures

TECHNICAL DATA

Heat output	50 W
Nominal voltage	120-240 V AC/DC
Voltage max	265V
Voltage min	110V
Heater body	Anodized aluminum
Starting current max	4 A
Recommended fuse (slow blow)	6 A

Height	60 mm
Width	25 mm
Depth	76 mm
Weight	0.2 kg

Protection class	I (earthed)
IP class	IP20
Approvals	RoHS 3, CE, UKCA, cRUus, EAC, UL E234324

Storage temperature	-45°C ... +70°C

Operating humidity	<90% RH
Connection type	3 pressure clamps for stranded wire 0.5-1.5mm² and rigid wire 0.5- 2.5mm²
Heat source	Self-regulating PTC-element
Housing	Anodized aluminium
Humidity storage	<90% RH
Mounting	DIN-rail 35mm
Operational temperature	-45°C ... +70°C

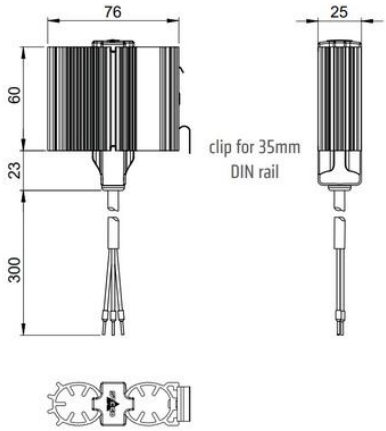

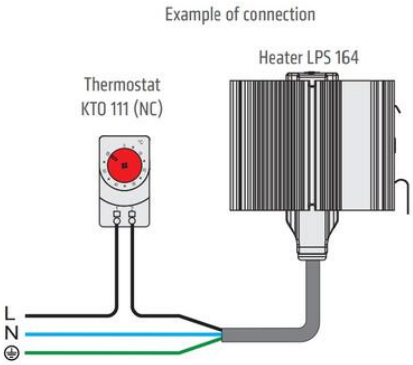

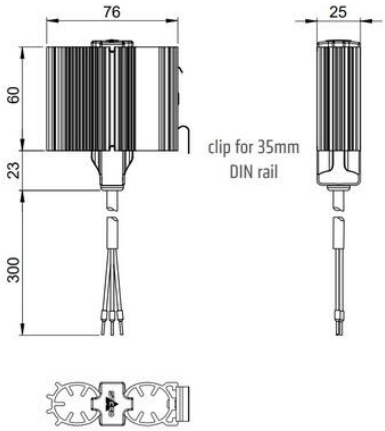
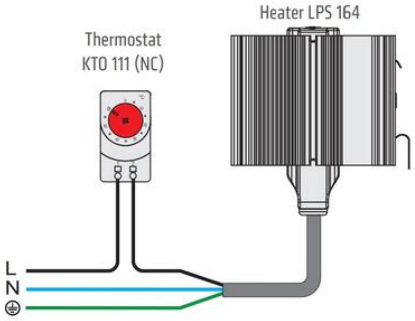
Example of connection