**OEM Automatic Ltd**
Address: Whiteacres, Whetstone Leicester, LE8 6ZG
0116 284 9900 | Orders@oem.co.uk | www.oem.co.uk

# GELBAU - SENSING STRIPS

3100.0118
Safety Edge Profile 21mm BLACK



- No mechanical components
- Easy installation
- IP67 (factory fitted)

### PRODUCT DESCRIPTION

The sensing strips consist of two layers of rubber, one with conductive and one normal insulating rubber. A copper wire embedded in two separated layers of conductive rubber together with a resistor at the end of the sensing strip, forms a closed circuit. If the separated layers are pressed together there is a short-circuit, the control unit react and its outputs release. In the same set hammer the control unit reacts to an open-circuit in the cable or in the sensing strip's copper conductor. Several sensing strips can be easily connected in series. Up to 100 m of sensing strip can be connected to one control unit.

## TECHNICAL DATA

| | |
|---|---|
| **Approvals** | CE, TÜV NORD |
| **Contact current** | 0.6 mA |
| **Contact voltage** | 5 V |
| **Height** | 21 mm |
| **In compliance with** | EMC, LVD, MD |
| **IP class** | IP67 |
| **Material** | EPDM |
| **Number of terminal strips max** | 10 |
| **Temperature ambient from** | -10 °C |
| **Temperature ambient to** | 50 °C |
| **Terminal strip length max** | 100 m |

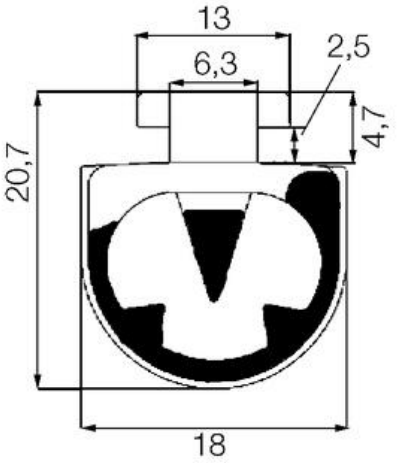
13
6,3
2,5
4,7
20,7
18