OEM Automatic Ltd
Address: Whiteacres, Whetstone Leicester, LE8 6ZG
0116 284 9900 | Orders@oem.co.uk | www.oem.co.uk

QUARTER-TURN WING KNOB 18MM STAINLESS STEEL

249085
Wing knob 18mm, stainless steel 316, padlockable



- Acid resistant
- Lockable with padlock
- IP65
- 18mm locking housing
- Compact

PRODUCT DESCRIPTION

Knob for 90° rotation, lockable with padlock. Made of acid-resistant steel (316). The rotation of the knob is blocked with the padlock bracket. Universal design with clockwise or counter-clockwise rotation when opening/closing. Supplied with nut. Protection class IP65.

Please note that rule is ordered separately. Select: rule with allowance

TECHNICAL DATA

Configurable	No
Material	Stainless Steel SIS2350 (316)

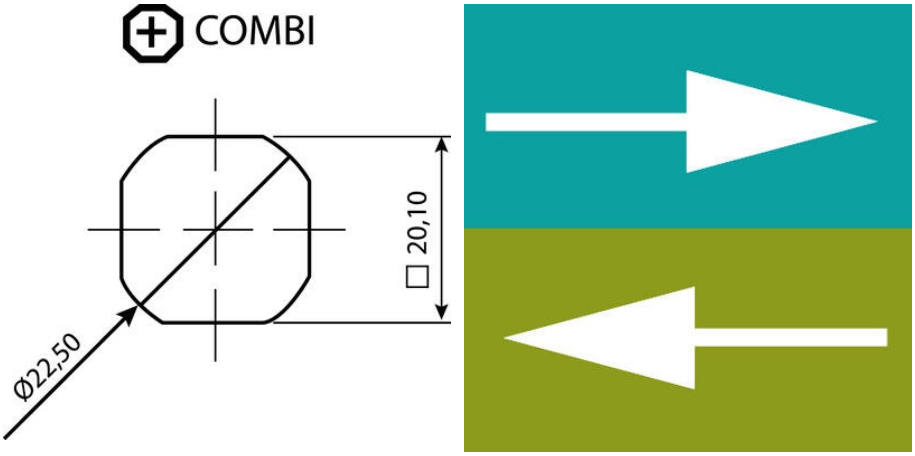

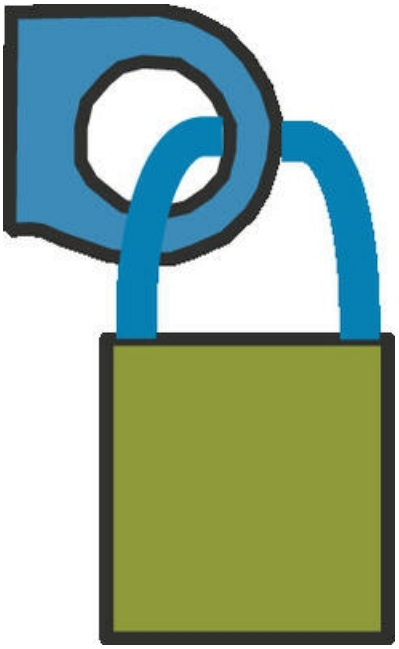

IP65

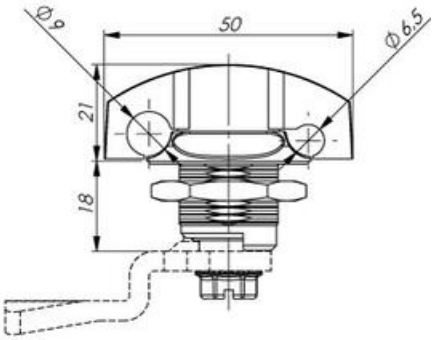

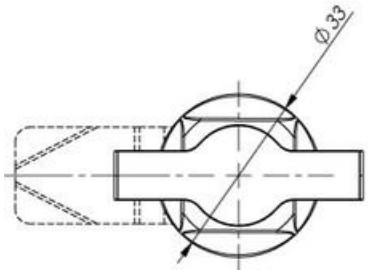

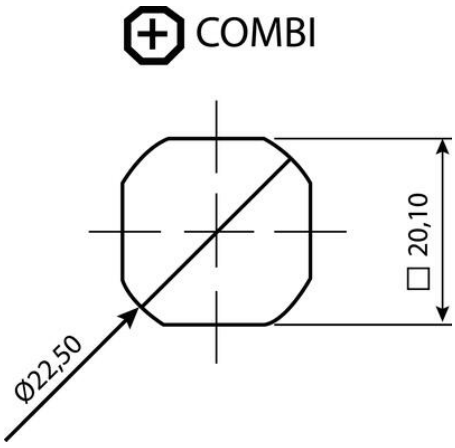

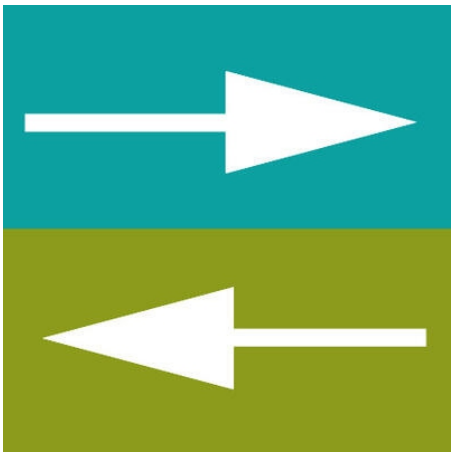

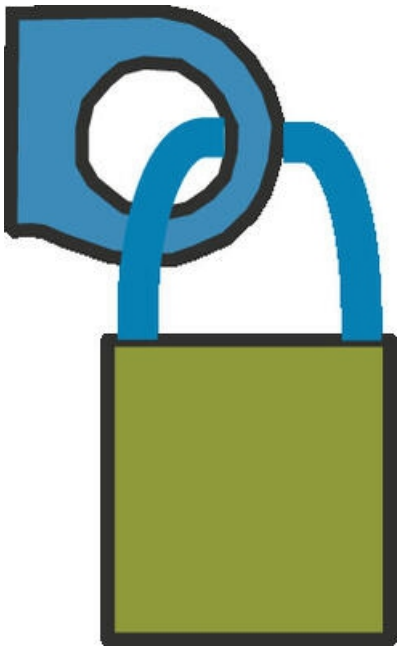

IP65