OEM Automatic Ltd
Address: Whiteacres, Whetstone Leicester, LE8 6ZG
0116 284 9900 | Orders@oem.co.uk | www.oem.co.uk

QUARTER-TURN 13.5MM LOCK

2456-113650-1324

- 13.5mm lock housing
- Compact
- 90°
- Vibration resistant
- Configurable

PRODUCT DESCRIPTION

A complete lock consists of lock housing, nut, insert, washer, screw and rule. Protection class IP65 is obtained by placing an O-ring on the insert and a flat gasket on the lock housing.

This variant that is in the picture is built with a product key, which is resolved together with the product manager.
Lock housing : Zinc, chrome-plated A=20 B=3
Nut : Standard
Lock housing insert: Insex 6
Surface coating: chrome
Mounting : IP 65 Mounted
Rule: steel
H/L measurements: 16.5/27 mm
The locks can be delivered unassembled, preassembled with enclosed rule or in complete assembled condition

Example: Lock housing - chrome-plated A=20, B=3, brass nut, insert Square 6 - chrome-plated, IP65 mounting and rule (fzb) standard for H=16.5 mm L=27 mm gives the following article number: 2452-001250-1627 .

Protection class IP65 is obtained by placing an O-ring on the insert and a flat gasket on the lock housing.

TECHNICAL DATA

Configurable	Yes
Dimension H	13.5 mm
Dimension L	24 mm
Material lock housing	Zinc, black powder coated
Material rule	Zinc plated steel
Opening angle	90 °

SKAPA ART.NR. FÖR KOMPLETT 90°-LÅS - KOMPAKT OCH VIBRATIONSRESISTENT - 13,5 mm (AAAA-BCCDEF-GGGG)

AAAA-	Låshus	B	Mutter	C C	Insats	D	Skruv	E	Montering	F	Regel	-GGGG	H/L i mm
2452-	Zink, förkromad A=20 B=3	0	SM	01	Fyrkant 6	2	Krom	0	IP54, omonterat	0	Stål	-0000	Ingen regel
2456-	Zink, svart A=20 B=3			02	Fyrkant 6 / M3	6	Svart	1	IP65, omonterat			-0724	7,5/24
				13	Trekant 6.5			2	IP54, bipackad regel			-0727	7,5/27
				26	Hejselspår			3	IP65, bipackad regel			-0730	7,5/30
				33	Insex 6			4	IP54, monterat			-0934	9/34
								5	IP65, monterat			-1027	10,5/27
												-1324	13,5/24
												-1327	13,5/27
												-1627	16,5/27
												-1834	18/34
												-1924	19,5/24
												-1927	19,5/27
												-2824	28/24

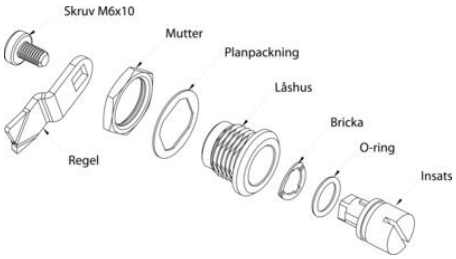

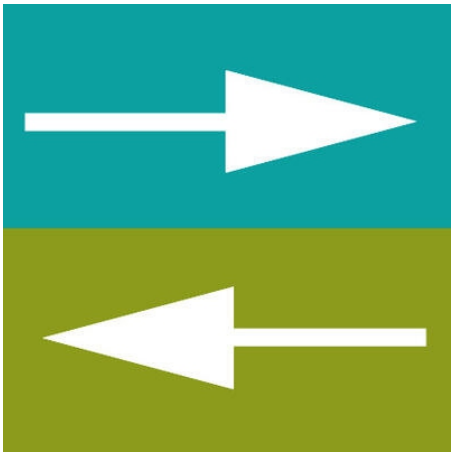

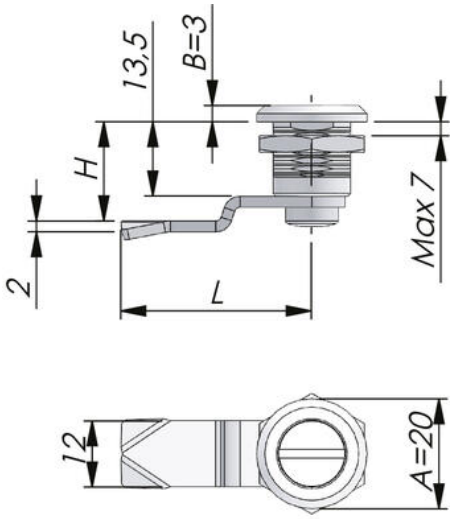

SKAPA ART.NR. FÖR KOMPLETT 90°-LÅS - KOMPAKT OCH VIBRATIONSRESISTENT - 13,5 mm (AAAA-BCCDEF-GGGG)

AAAA-	Låshus	B	Plattorp	C	Ornarm	D	Ytfinish	E	Planpackning	F	Regel	-GGGG	H/L i mm
2452-	Zink, förkromad A=20 B=3	0	Stift	01	Fyrkant 6	2	Krom	0	IP54, omonterat	0	Stål	-0000	Ingen regel
2456-	Zink, svart A=20 B=3			02	Fyrkant 6 / H2	6	Svart	1	IP65, omonterat			-0724	7,5/24
				13	Trekant 6,5			2	IP54, bipackad regel			-0727	7,5/27
				26	Hejselspår			3	IP65, bipackad regel			-0730	7,5/30
				33	Inses 6			4	IP54, monterat			-0934	9/34
								5	IP65, monterat			-1027	10,5/27
												-1324	13,5/24
												-1327	13,5/27
												-1427	14,5/27
												-1834	18/34
												-1924	19,5/24
												-1927	19,5/27
												-2824	28/24

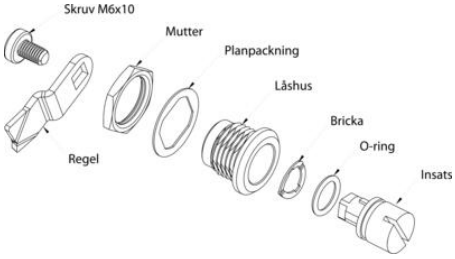

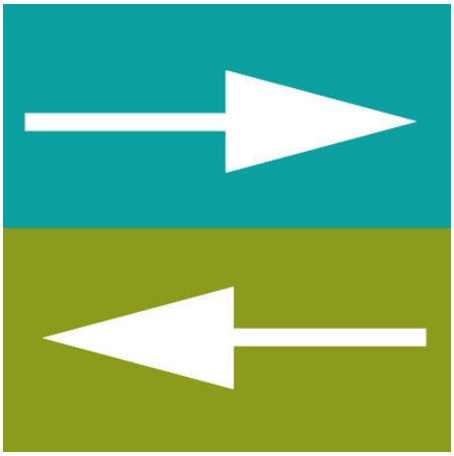

DIN EN 61373
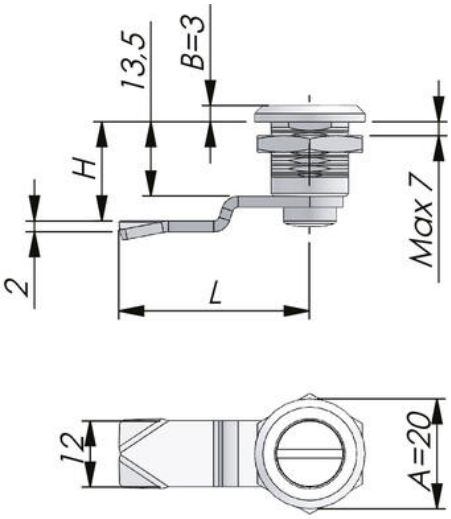
IP65