OEM AUTOMATIC

OEM Automatic Ltd
Address: Whiteacres, Whetstone Leicester, LE8 6ZG
0116 284 9900 | Orders@oem.co.uk | www.oem.co.uk

CONTACLIP

DOUBLE DECK TERMINALS - PRKD/PSLD 2.5 - 4MM²

Push In Double Deck Terminals - PRKD, PSLD

27071.2
PSLD 4, Snap on 4mm² linked double deck earth terminal 4 connections

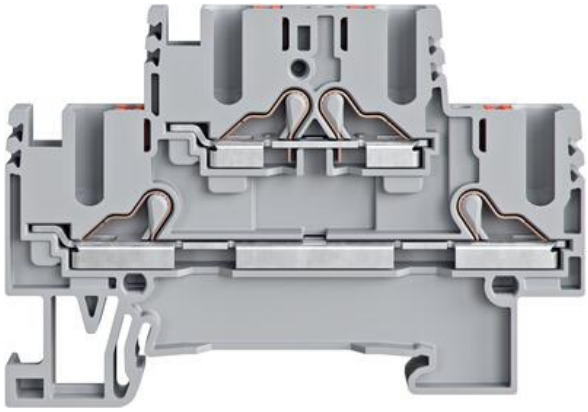

- Push In technology
- Linked options
- Colour marked versions
- 1 in 2 out 4mm² version
- Earth variants

PRODUCT DESCRIPTION

With a width of just 5 and 6 mm, the PRKD series of Push In Double level terminlas are available in various versions for cross- sections 2.5 mm² and 4 mm² cable sizes
The Push-in spring opens automatically when the wire is inserted giving a secure contact with the busbar. The integrated insulated orange pusher can be used to open the clamp to release the wire or to insert stranded wire without ferrules.
Linked SV versions and colour coded options offers a flexible and compact connection system where space is at a premium.

TECHNICAL DATA

GENERAL DATA

Rated wire cross section	4 mm²
Colour	Green/yellow
Rated voltage IEC	500 V
Rated current IEC	22 A
Mounting	Mounting rail TS 35/7.5
Rated impulse voltage	6 kV
Overvoltage category	3
Contamination degree	3

DIMENSIONS

Length	75.7 mm
Width	6.1 mm
Height TS 35/7.5	50.3 mm
Height	48.8 mm

CONNECTION DATA

Connections	2x2
Number of levels	2
Plug gauge acc. EN 60 947-1	A4
Cross connect channels	2
Cross section single wire from	0.5 mm²
Cross section single wire to	6 mm²
Cross section stranded wire from	0.5 mm²
Cross section stranded wire to	4 mm²
Cross section stranded with ferrule from	0.5 mm²
Cross section stranded with ferrule to	4 mm²
Rated wire cross section from	20 AWG
Rated wire cross section to	10 AWG
Stripping length	12 mm

MATERIALS

Insulation material	Polyamide 6.6
Flammability class	V-0
Operating temperature from	-40 °C
Operating temperature to	120 °C

ADDITIONAL DATA

Tariff code	85369010
Country of origin	DE
Weight	18.94 g
Pack size	50
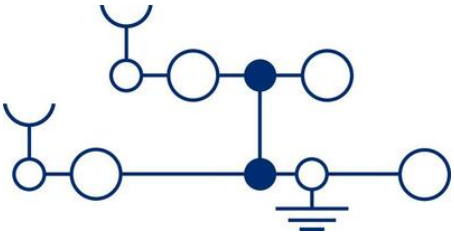
Number of terminals per level	2