OEM Automatic Ltd
Address: Whiteacres, Whetstone Leicester, LE8 6ZG
0116 284 9900 | Orders@oem.co.uk | www.oem.co.uk

TUBULAR CABLE LUGS L SERIES 70MM² - 630MM²

L7010FMS
70mm² Cable Lug M10, Flared

- Simple and safe connection due to flat contact surfaces and internal chamfer
- Reliable assignment owed to item designation on the cable lug
- Ideal cable lug for control cabinet construction
- In combination with the EKM 60 ID and EK 30 ID suitable for fine wired conductors
- Tin-plated to protect against corrosion

PRODUCT DESCRIPTION

Discover KLAUKE's L series tubular cable lugs, designed for 70mm² - 630mm² cables. Enjoy safe connections, clear item designation, and ideal use in control cabinets.

TECHNICAL DATA

GENERAL DATA

Connection bolts Ø	M10
Nominal cross section	70 mm²

DIMENSIONS

Dimension A	20 mm
Dimension B	21 mm
Dimension D2	10.5 mm
Dimension C1	12 mm
Dimension C2	10.5 mm
Dimension D1	11.2 mm
Dimension D4	14.5 mm
Dimension L	41 mm

ADDITIONAL DATA

Pack size	100
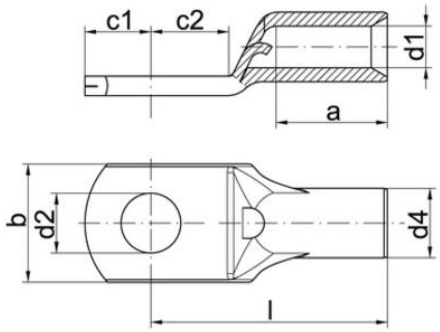
Weight	3 kg